HYDRAULIC CYLINDER

Qingdao Weitai Hydraulic Co., Ltd.

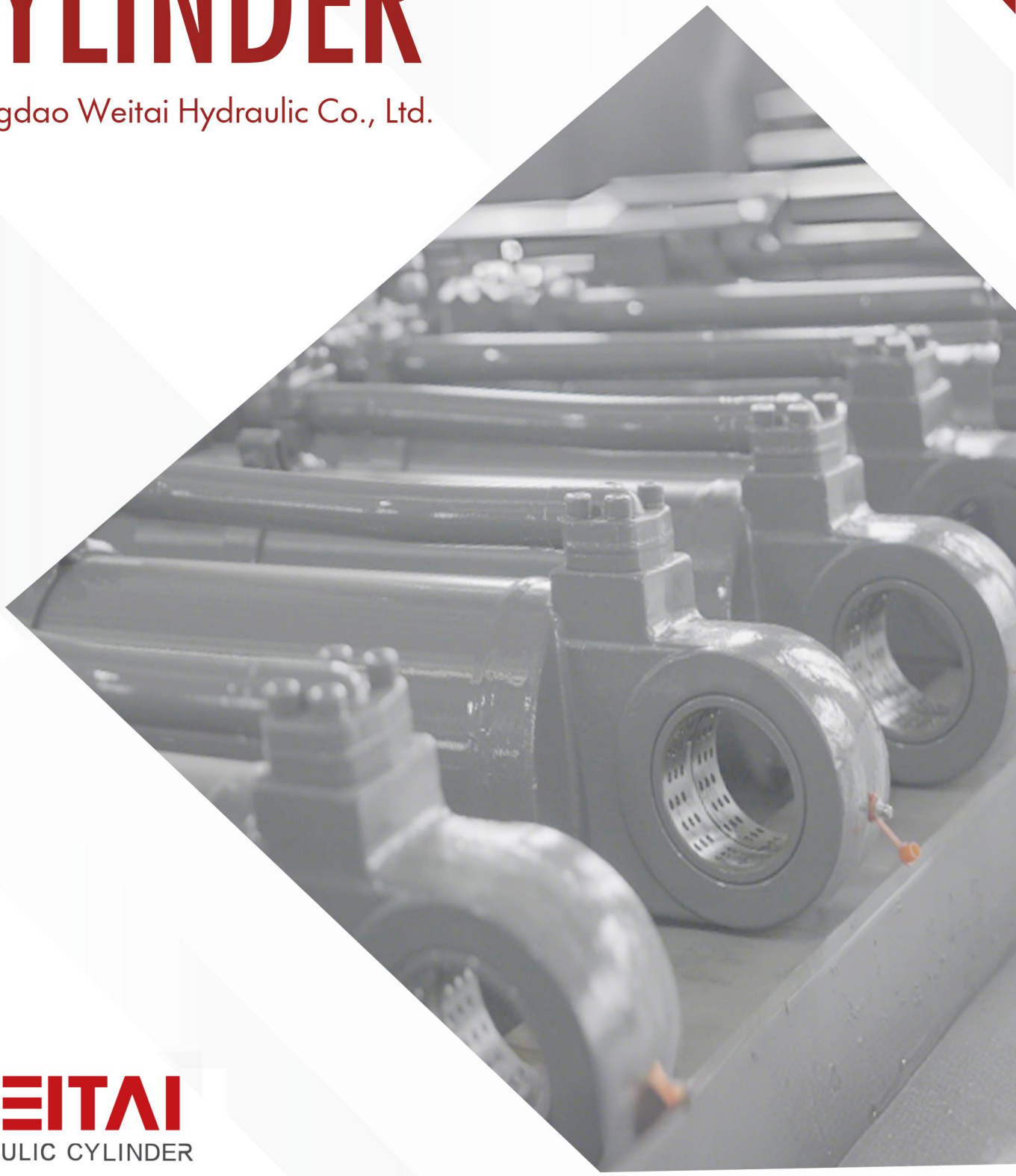

WEITAI
HYDRAULIC CYLINDER

WEITAI
HYDRAULIC CYLINDER

WEITAI HYDRAULIC

A global supplier of mobile hydraulic products

WEITAI Hydraulic is committed to providing excellent hydraulic products and services to both businesses and final users worldwide. WEITAI's global strategy allows us to enhance the enterprises' competitiveness, build industrial and commercial relationships with major international hydraulic industry organizations and customers, and provide quick and local response services across the world.

WEITAI Hydraulic takes a leading position in its core market whether operating alone or cooperating with other organizations.









FULL LINE OF HIGH PERFORMANCE, HIGH-QUALITY HYDRAULIC CYLINDER

CONTENTS

APPLICATION

EXCAVATOR CYLINDER 2

SKID STEER LOADER CYLINDER 3

LOADER CYLINDER 3

MINING CYLINDER 4

AERIAL WORK PLATFORM CYLINDER 6

SNOW PLOW CYLINDER 7

METRIC CYLINDER

SINGLE ACTING CYLINDER 8

WPL -Plunger

WPE -Plunger with end

DOUBLE ACTING CYLINDER 9

WDF -Fork End

WDN -None End

WDP -Point End

WDC -Cross Tube End

IMPERIAL CYLINDER

TIE ROD CYLINDER 13

WTR2.5 Series

WTR3 Series

WELDED HYDRAULIC CYLINDER 18

WBU -Cross Tube Cylinder

WCL -Clevis End Cylinder

WTCL- Adjustable Clevis End Cylinder

WTH -Through Hole Cylinder

INVERTED TELESCOPIC CYLINDER 30

7 Tons-Inverted Telescopic Cylinder

12 Tons-Inverted Telescopic Cylinder

CUSOMIZED HYDRAULIC CYLINDER 31

EXCAVATOR CYLINDER

WEITAI
HYDRAULIC CYLINDER

Optimized for Performance from 1.6 to 125 Tons

WEITAI provides a comprehensive range of high-performance hydraulic cylinders engineered for mainstream excavator models, covering compact to ultra-large classes (1.6t - 125t).

WEITAI cylinders are designed for extreme duty cycles, offering OEM-level reliability and extended service life. Leveraging proprietary R&D and patented designs, we offer fully customizable solutions to meet specific field requirements.

Technical Advantages

Patented Cushioning Technology:
Featuring our proprietary buffering system, ensuring smooth deceleration and minimized impact loads. This significantly enhances structural integrity and operator comfort during high-speed operations.

Premium Sealing & Guiding:
Equipped with world-class imported seals and high-strength wear rings. This configuration ensures low-friction movement, rapid response times, and zero-leak performance under high-pressure conditions.

Nickel-Chromium Composite Plating:
Piston rods feature a specialized Ni-Cr coating with surface hardness ≥850 HV. This provides exceptional resistance to abrasive wear and salt-spray corrosion in harsh climates.

Induction Hardened Piston Rods:
Rods undergo high-frequency induction hardening to a surface hardness of ≥52 HRC. This creates the optimal balance of core toughness and external impact resistance, preventing rod bending and surface scarring.

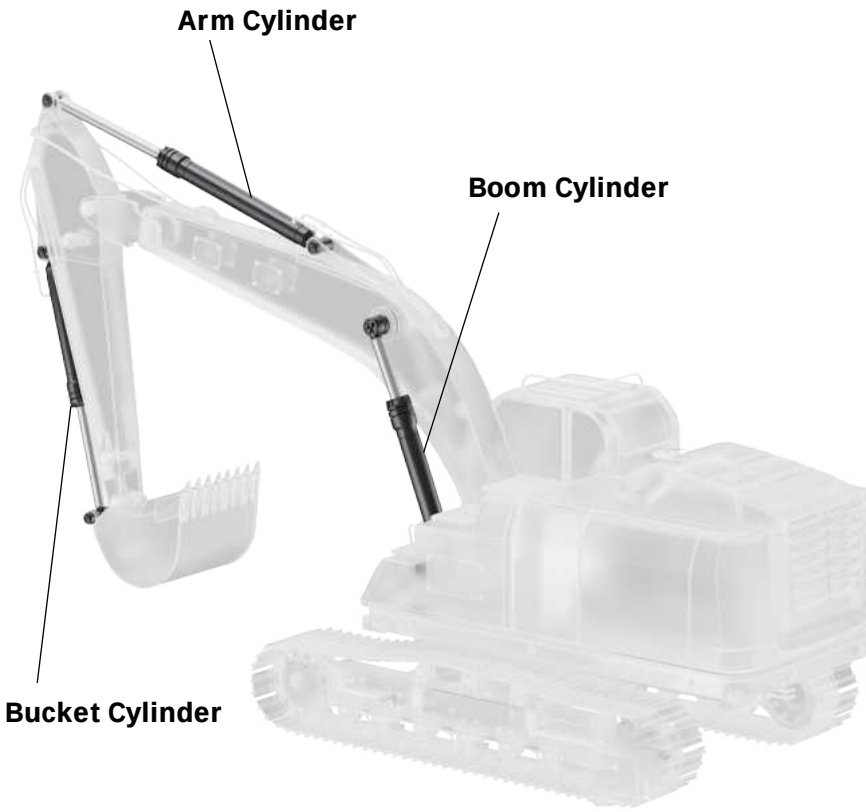

MODEL	SPECIFICATIONS (MM)			THRUST/PULL FORCE (KN)		WORKING PRESSURE(MPA)
	BORE DIAMETER	ROD DIAMETER	STROKE	PULL FORCE	THRUST FORCE	
Boom cylinder	55-200	30-140	380-1800	52-700	74-1372	34
Arm cylinder	55-215	30-150	400-2150	52-814	74-1586	34
Bucket cylinder	50-210	35-145	350-1460	31-791	61-1513	34
Dozer blade cylinder	75-130	40-70	120-180	99-412	138-580	34
Angle blade cylinder	63-70	35-40	360-430	67-113	97-168	34
Deflection swing cylinder	55-110	35-60	350-620	44-292	74-415	34
Deflection steer cylinder	63-100	35-60	260-360	67-220	97-343	34

SKID STEER LOADER CYLINDER

WEITAI
HYDRAULIC CYLINDER

Performance Characteristics

WEITAI skid steer loader cylinders are engineered for fast cycle times, frequent direction changes, and high breakout forces typical of skid steer and compact track loaders. Optimized internal design and robust end construction ensure quick response, smooth control, and structural strength under continuous high-frequency operation.
Manufactured to OEM standards with high-quality sealing systems, WEITAI cylinders deliver reliable, leak-free performance and long service life in demanding jobsite environments.

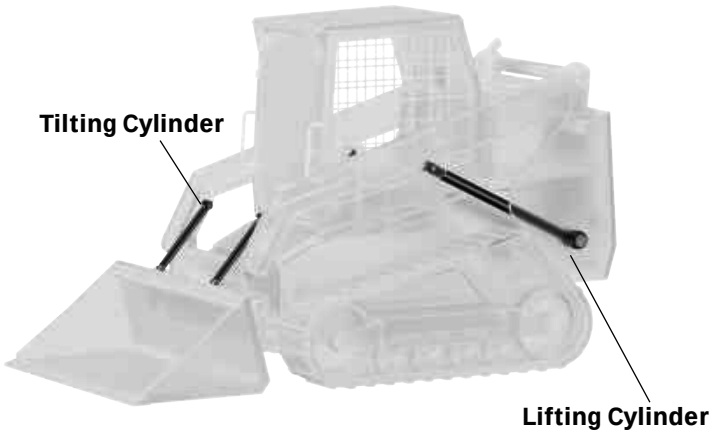

MODEL	SPECIFICATIONS (MM)			THRUST/PULL FORCE (KN)		WORKING PRESSURE(MPA)
	BORE DIAMETER	ROD DIAMETER	STROKE	PULL FORCE	THRUST FORCE	
Lifting Cylinder	50-75	32-55	120-1000	25-60	45-105	23
Tilting Cylinder	60-75	35-40	145-435	45-80	70-105	23

LOADER HYDRAULIC CYLINDER

WEITAI
HYDRAULIC CYLINDER

Performance Characteristics

WEITAI loader hydraulic cylinders are built for heavy lifting and sustained operation under extreme loads. Using premium-grade steel, wear-resistant rod surface treatments, and reinforced structures, they provide stable lifting power, precise bucket control, and excellent resistance to pressure spikes and abrasion. With OEM-level manufacturing quality and flexible customization options, WEITAI cylinders ensure durable, consistent performance across a wide range of loader applications.

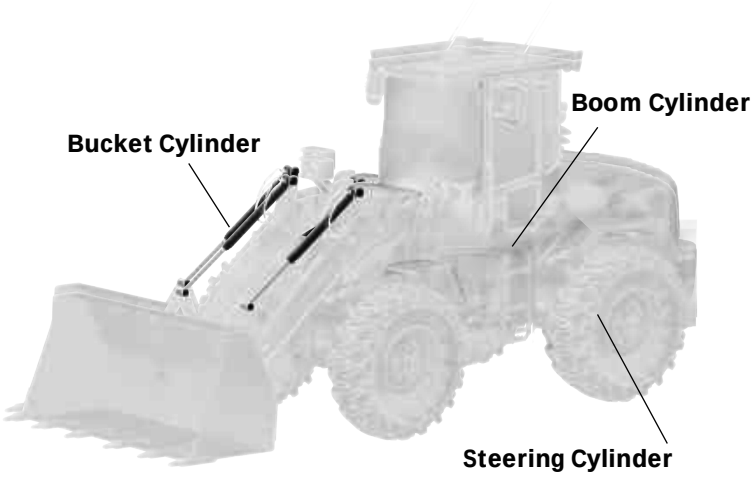

MODEL	SPECIFICATIONS (MM)			THRUST/PULL FORCE (KN)		WORKING PRESSURE(MPA)
	BORE DIAMETER	ROD DIAMETER	STROKE	PULL FORCE	THRUST FORCE	
Steering Cylinder	60-110	30-60	290-540	60-180	95-240	25
Boom Cylinder	70-180	40-100	450-850	60-500	105-720	28
Bucket Cylinder	90-210	40-100	370-720	140-660	170-880	28

MINING CYLINDER

WEITAI HYDRAULIC CYLINDER

Performance Characteristics

WEITAI provides a comprehensive portfolio of hydraulic solutions for off-highway wide-body trucks and heavy-duty mining equipment, precision-engineered to match or exceed the performance of industry-leading OEMs.

WEITAI cylinders are built for the most demanding mining environments—ensuring maximum durability and operator comfort during 24/7 operations. From heavy-duty hoist and suspension systems to roadheaders and tunneling machines, our products offer full OEM compatibility and mission-critical reliability in every cycle.

Suspension Cylinder



- Full pneumatic suspension buffering technology;
- Adopting oil and gas separation sealing system, the suspension cylinder boasts good buffering performance and fast response time;
- The piston rod is made of high-strength and tough material, providing strong impact resistance.
- Using imported inflation valve and intersecting exhaust structure, ensuring excellent airtight sealing performance of the enclosed chamber.

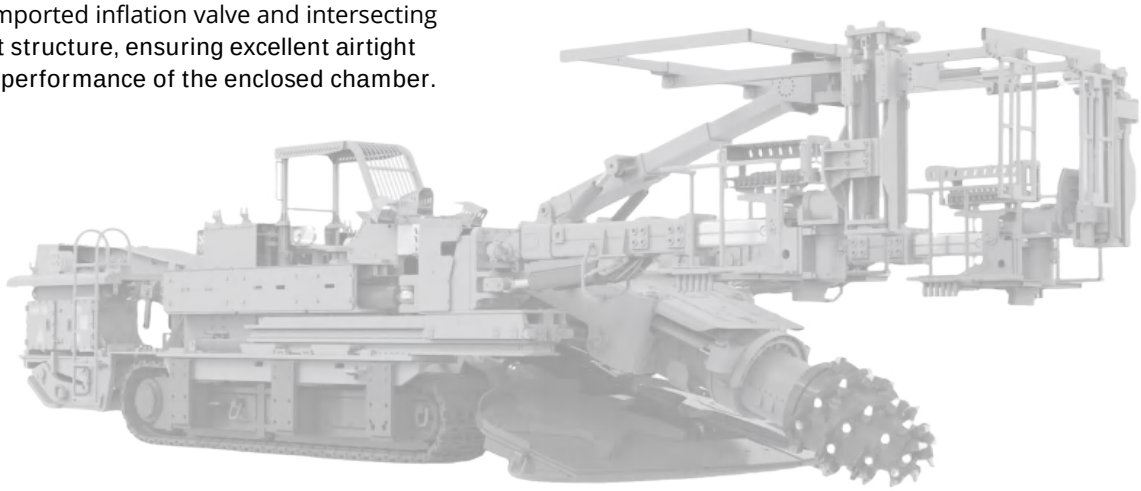



Cutting Head Telescopic Cylinder

- The pin hole is equipped with a skeleton dust seal, providing strong dust-proof performance;
- Double-layer chrome plating process, with a hardness value (HV) greater than 850,ensuring wear and corrosion resistance;
- Piston rod high-frequency quenching process, with a hardness value (HRC) greater than 52, ensuring wear resistance and impact resistance.

MINING CYLINDER

WEITAI HYDRAULIC CYLINDER

ITEM	MODEL	SPECIFICATIONS (MM)			THRUST/PULL FORCE (KN)		WORKING PRESSURE(MPA)
		BORE DIAMETER	ROD DIAMETER	STROKE	PULL FORCE	THRUST FORCE	
Wide-body Truck Cylinder	Rear suspension cylinder	180-220	150-180	110-150	272-440	891-1331	28
	Lifting cylinder	140-180	135-175	780-2750	/	392-648	20
	Front suspension cylinder	160-170	120-130	140-200	308-330	704-795	28
	Accumulator cylinder	140	0	0	/	/	28
	Steering cylinder	70-80	40-45	360-420	59-79	88-115	21
Roadheader Cylinder	Blade lifting cylinder	180-300	110-180	120-1060	508-1440	810-2250	25
	Rear support cylinder	160-250	100-180	190-310	390-753	640-1563	25
	Cutting head rotary cylinder	160-250	100-160	600-1060	491-1162	806-1969	32
	Cutting head telescopic cylinder	100-125	63-80	500-650	190-291	315-492	32
	Cutting head lifting cylinder	180-250	110-150	420-1130	639-1260	1021-1969	32
Mining Vehicles Cylinder	Rear suspension cylinder	240-330	180-290	150-200	/	1152-2178	20
	Lifting cylinder	150-260	120-240	8200-2720	/	563-1690	25
	Front suspension cylinder	210-280	180-240	250-320	234-416	882-1568	20
	Steering cylinder	80-120	45-75	470-620	79-158	115-259	20
Anchor Drilling Rig Cylinder	Blade lifting cylinder	220-250	160-180	200-210	479-632	1016-1313	21
	Roof support telescopic cylinder	40	25	580-900	16	26	16
	Rear support cylinder	250	180	250	753	1563	25
	Sliding frame cylinder	50	40	980-1130	14	40	16
	Cutting head lifting cylinder	180-220	110-140	430-590	508-720	810-1210	25
	Chain-driven cylinder	50	35	670-750	32	63	25
	Primary telescopic cylinder	100	75	1600-2230	109	250	25
	Support turnover cylinder	63-90	40-55	560-790	59-127	99-203	25
	Boom extension cylinder	63-80	40-55	1000-1250	50-71	83-134	21
	Left blade lifting cylinder	220-250	160-180	200-210	570-753	1210-1563	25
Tunnel Repair Machine Cylinder	Bucket cylinder	80	55	430	84	160	25
	Boom tilting cylinder	110	70	100	144	242	20
	Boom cylinder	100	65	445	144	250	25
	Arm cylinder	90	60	460	113	203	25
	Jib cylinder	85	45	85	104	145	20
	Dozer blade cylinder	85	45	110	104	145	20

AERIAL WORK PLATFORM CYLINDER SAFETY-DRIVEN PRECISION

WEITAI HYDRAULIC CYLINDER

Performance Characteristics

WEITAI offers a complete range of hydraulic cylinders engineered specifically for aerial work platforms, including scissor lifts, mast lifts, and articulated boom machines. Designed for stable lifting and accurate positioning at height, our cylinders deliver smooth, controlled motion under variable loads. With proven OEM manufacturing capability and application-focused engineering, WEITAI supports compact to heavy-duty platforms with durable, reliable, and fully customizable cylinder solutions.

Technical Advantages

Stable & Controlled Movement
Optimized cushioning and flow paths ensure smooth stroke transitions, effectively reducing shock, vibration, and platform sway during lifting and lowering.

Leak-Free Sealing Performance
High-quality sealing and guiding systems provide low friction and consistent sealing integrity, supporting precise control and long service intervals.

Enhanced Corrosion Protection
Chrome plated piston rods offer strong resistance to wear and environmental corrosion, ideal for outdoor and high-frequency use.

High-Strength Structural Design
Reinforced steel tubes and precision manufacturing enable excellent resistance to side loads and repetitive duty cycles common in aerial platforms.

Compact, OEM&ODM Design
Application-matched cylinder geometry delivers high force output within limited installation space, giving OEMs greater flexibility in platform design.

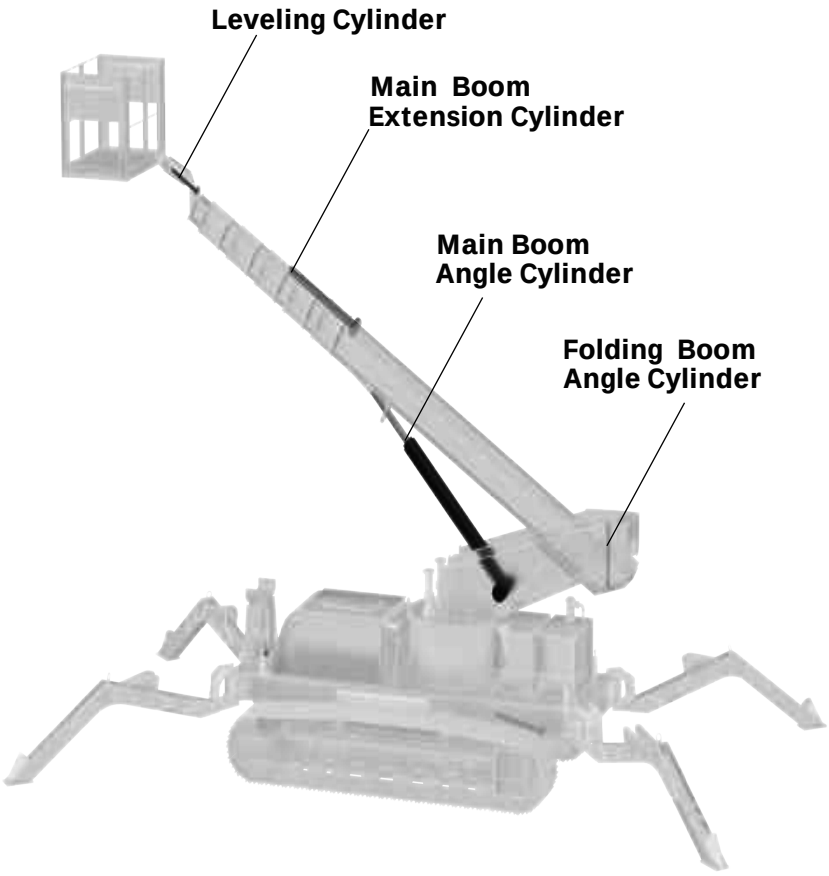

MODEL	SPECIFICATIONS (MM)			MAX THRUST FORCE (KN)	MAX WORKING PRESSURE
	BORE DIAMETER	ROD DIAMETER	STROKE		
Lifting Cylinder	55-380	40-200	280-2200	2850	25
Steering Cylinder	40-70	20-40	100-500	80	20
Main Boom Angle Cylinder	50-70	40-60	300-500	70	21
Lifting Cylinder	60-80	40-60	1150-1300	90	18
Steering Cylinder	40-50	20-30	140-250	39	20
Leveling Cylinder	80-140	40-90	300-600	345	24
Jib Cylinder	60-110	40-90	500-1200	210	22
Luffering Cylinder	80-230	40-140	200-1000	1000	24

SNOW PLOW CYLINDERS

WEITAI HYDRAULIC CYLINDER

Performance Characteristics

WEITAI snow plow hydraulic cylinders are designed for dependable performance in harsh winter conditions, supporting blade lifting, lowering, angling, and floating functions. Rated up to 3000 PSI, they feature pin-hole mountings at both ends and dual 1/4" ports in inline or 90-degree configurations for easy installation. Built from high-strength steel with honed tubes, premium seals, and hard chrome plated rods, these cylinders offer excellent durability, corrosion resistance, and smooth operation at low temperatures.

Based on the proven SPA series, WEITAI cylinders are available in single-acting or double-acting designs, interchangeable with most major snow plow brands, and customizable as required—delivering reliable quality at a competitive cost.

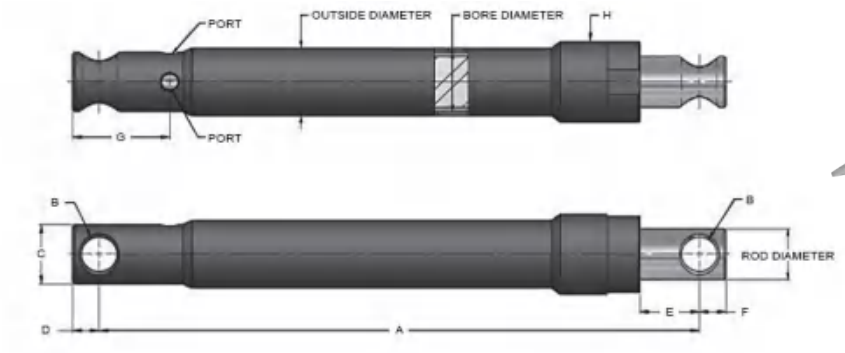

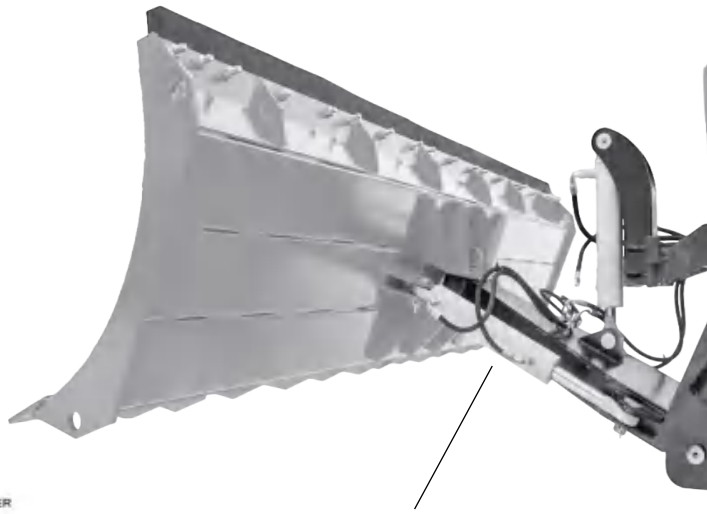

Plunger Cylinder

PART NUMBER	REPLACEMENT	BORE & STROKE	OUTSIDE DIAMETER	ROD	A	B	C	D	E	F	G	H	PORT	WEIGHT (LBS)
SPA-1510-0750	ARCTIC	1.75" X 10.00"	2.00"	1.50"	17.00"	0.76"	1.75"	0.75"	1.68"	0.75"	2.75"	2.37"	1/4-NPT (2X)	12
SPA-1512-0750	ARCTIC	1.75" X 12.00"	2.00"	1.50"	19.00"	0.76"	1.75"	0.75"	1.68"	0.75"	2.75"	2.37"	1/4-NPT (2X)	13
SPF-1510-1000	FISHER	1.75" X 10.00"	2.00"	1.50"	17.00"	1.01"	1.75"	0.75"	1.68"	0.75"	2.75"	2.37"	1/4-NPT (2X)	11
SPF-1512-1000	FISHER	1.75" X 12.00"	2.00"	1.50"	19.25"	1.01"	1.75"	0.75"	1.93"	0.75"	2.75"	2.37"	1/4-NPT (2X)	13
SPF-2016-1250	FISHER	2.25" X 16.00"	2.50"	2.00"	23.25"	1.26"	2.25"	0.87"	1.75"	0.87"	2.75"	3.00"	1/4-NPT (2X)	27
SPM-1506-0625	MEYER	1.75" X 6.00"	2.00"	1.50"	12.37"	0.63"	1.62"	0.75"	1.56"	0.75"	2.12"	2.37"	1/4-NPT	9
SPM-1510-0625	MEYER	1.75" X 10.00"	2.00"	1.50"	16.18"	0.63"	1.62"	0.75"	1.62"	0.75"	2.12"	2.37"	1/4-NPT	14
SPM-1512-0625	MEYER	1.75" X 12.00"	2.00"	1.50"	18.00"	0.63"	1.62"	0.75"	1.43"	0.75"	2.12"	2.37"	1/4-NPT	15
SPM-2012-0625	MEYER	2.25" X 12.00"	2.50"	2.00"	18.00"	0.63"	1.62"	0.75"	0.75"	0.75"	2.25"	3.00"	1/4-NPT	24
SPW-1506-0750	WESTERN	1.75" X 6.00"	2.00"	1.50"	13.00"	0.76"	1.75"	0.68"	1.37"	0.68"	2.75"	2.37"	1/4-NPT (2X)	11
SPW-1508-0750	WESTERN	1.75" X 8.00"	2.00"	1.50"	15.25"	0.76"	1.75"	0.68"	1.62"	0.68"	2.75"	2.37"	1/4-NPT (2X)	12
SPW-1510-0750	WESTERN	1.75" X 10.00"	2.00"	1.50"	17.25"	0.76"	1.75"	0.68"	1.62"	0.68"	2.75"	2.37"	1/4-NPT (2X)	14
SPW-1510-1000	WESTERN	1.75" X 10.00"	2.00"	1.50"	17.00"	1.01"	1.75"	0.75"	1.43"	0.75"	2.75"	2.37"	1/4-NPT (2X)	14
SPW-2006-0750	WESTERN	2.25" X 6.00"	2.50"	2.00"	13.18"	0.76"	2.25"	0.75"	1.56"	0.75"	2.75"	3.00"	1/4-NPT (2X)	18
SPW-2010-1000	WESTERN	2.25" X 10.00"	2.50"	2.00"	17.25"	1.01"	2.25"	0.75"	1.62"	0.75"	2.75"	3.00"	1/4-NPT (2X)	22
SPW-2016-1000	WESTERN	2.25" X 16.00"	2.50"	2.00"	23.31"	1.01"	2.25"	0.75"	1.68"	0.75"	2.56"	3.00"	1/4-NPT (2X)	31

SEAL TEMPERATURE RANGE: -30℃/+100℃ (-22℉/+212℉)
SEAL MAXIMUM SPEED: 3 FT/SEC

CYLINDER WITH 1 PORT=PORT IN LINE WITH PIN HOLE RETRACTED AND STROKE TOLERANCE ±1/8"

SINGLE ACTING HYDRAULIC CYLINDER

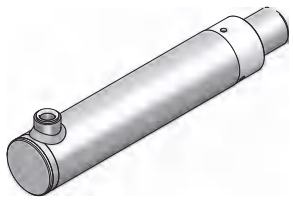

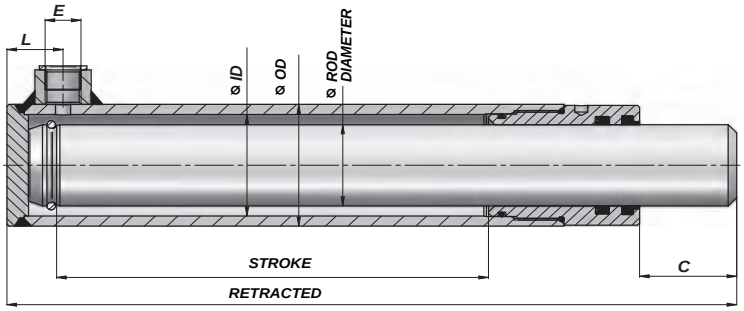

WPL SERIES-PLUNGER

MODEL	BORE & STROKE	ROD DIAMETER	DIMENSIONS		PORTS	L	WEIGHT (KG)
			RETRACTED	EXTENDED			
WPL40200	40X200	30	320	520	3/8"	23	3.6
WPL40250	40X250		370	620			4.2
WPL40300	40X300		420	720			4.7
WPL40350	40X350		470	820			5.3
WPL40400	40X400		520	920			5.8
WPL40500	40X500		620	1120			7
WPL50200	50X200	40	330	530	3/8"	26	5.5
WPL50300	50X300		430	730			7.2
WPL50400	50X400		530	930			8.9
WPL50500	50X500		630	1130			10.5
WPL50600	50X600		730	1330			12
WPL60300	60X300	50	450	750	3/8"	30	10.6
WPL60400	60X400		550	950			12.9
WPL60500	60X500		650	1150			15.2
WPL60600	60X600		750	1350			17.6

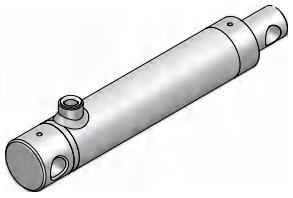

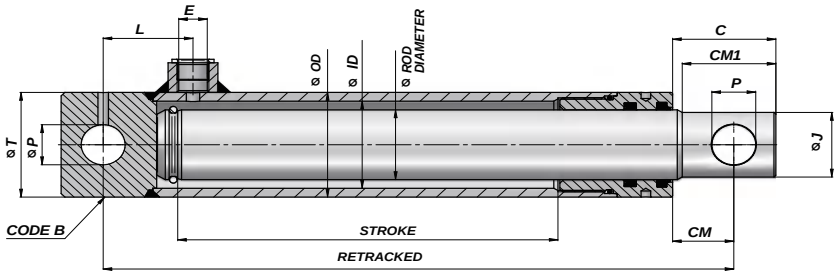

WPE SERIES-PLUNGER WITH END

MODEL	BORE & STROKE	ROD DIAMETER	DIMENSIONS		PORTS	L	WEIGHT (KG)
			RETRACTED	EXTENDED			
WPE40200	40X200	30	300	500	3/8"	42	3.7
WPE40250	40X250		350	600			4.2
WPE40300	40X300		400	700			4.8
WPE40350	40X350		450	800			5.4
WPE40400	40X400		500	900			5.9
WPE40550	40X550		650	1200			7.6
WPE50200	50X200	40	350	550	3/8"	47	6.5
WPE50250	50X250		400	650			7.4
WPE50300	50X300		450	750			8
WPE50350	50X350		500	850			9.7
WPE50400	50X400		550	950			12.3
WPE50550	50X550		700	1250			15
WPT60300	60X300	50	450	750	3/8"	50	11.5
WPT60400	60X400		550	950			13.5
WPT60550	60X550		700	1250			17
WPT60700	60X700		850	1550			20

DOUBLE ACTING CYLINDER - FORK END



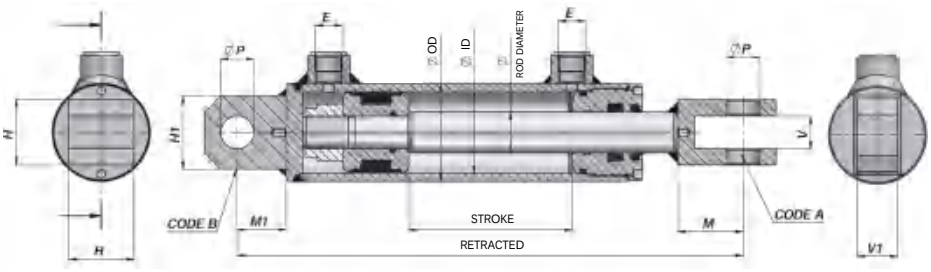

WDF SERIES-FORK END

MODEL	BORE & STROKE	ROD DIAMETER	DIMENSIONS		PORTS	ØP	WEIGHT (KG)
			RETRACTED	EXTENDED			
WDF40100	40X100	20	300	400	1/4”	16.2	2.8
WDF40150	40X150		350	500			3.2
WDF40200	40X200		400	600			3.6
WDF40250	40X250		450	700			4
WDF40300	40X300		500	800			4.4
WDF40350	40X350		550	900			4.8
WDF40400	40X400		600	1000			5.2
WDF40450	40X450		650	1100			5.6
WDF40500	40X500		700	1200			6
WDF50100	50X100	25	310	410	3/8”	20.25	3.8
WDF50150	50X150		360	510			4.4
WDF50200	50X200		410	610			4.9
WDF50250	50X250		460	710			5.4
WDF50300	50X300		510	810			6
WDF50350	50X350		560	910			6.4
WDF50400	50X400		610	1010			7
WDF50450	50X450		660	1110			7.5
WDF50500	50X500		710	1210			8
WDF60100	60X100	30	350	450	3/8”	20.25	5.9
WDF60150	60X150		400	550			6.6
WDF60200	60X200		450	650			7.3
WDF60250	60X250		500	750			8
WDF60300	60X300		550	850			8.6
WDF60350	60X350		600	950			9.3
WDF60400	60X400		650	1050			10
WDF60450	60X450		700	1150			10.7
WDF60500	60X500		750	1250			11.3
WDF70100	70X100	35	350	450	3/8”	25.25	7.2
WDF70150	70X150		400	550			8
WDF70200	70X200		450	650			8.8
WDF70250	70X250		500	750			9.7
WDF70300	70X300		550	850			10.5
WDF70350	70X350		600	950			11.5
WDF70400	70X400		650	1050			12.2
WDF70450	70X450		700	1150			13
WDF80500	70X500		750	1250			13.8
WDF80200	80X200	40	480	680	1/2"	30.25	12.8
WDF80250	80X250		530	780			13.8
WDF80300	80X300		580	880			15
WDF80400	80X400		680	1080			17.2
WDF80500	80X500		780	1280			19.5
WDF80600	80X600		880	1480			21

DOUBLE ACTING CYLINDER-NONE END

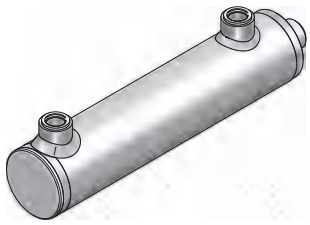

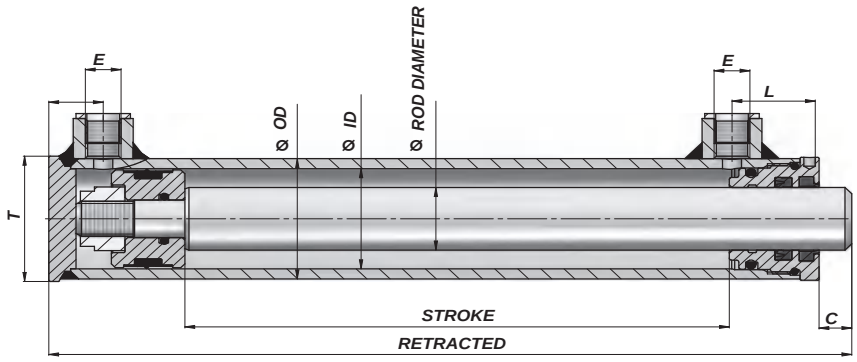

WDN SERIES-NONE END

MODEL	BORE & STROKE	ROD DIAMETER	DIMENSIONS		PORTS	L	WEIGHT (KG)
			RETRACTED	EXTENDED			
WDN40100	40X100	20	200	300	1/4"	32	1.8
WDN40150	40X150		250	400			2.1
WDN40200	40X200		300	500			2.5
WDN40250	40X250		350	600			2.8
WDN40300	40X300		400	700			3.1
WDN40400	40X400		500	900			4.5
WDN40500	40X500		600	1100			6
WDN50100	50X100	25	200	300	3/8"	36	2.5
WDN50150	50X150		250	400			3
WDN50200	50X200		300	500			3.5
WDN50250	50X250		350	600			4
WDN50300	50X300		400	700			4.4
WDN50400	50X400		500	900			5.3
WDN50500	50X500		600	1100			6.2
WDN60100	60X100	30	220	320	3/8"	39	3.8
WDN60150	60X150		270	420			4.4
WDN60200	60X200		320	520			5
WDN60250	60X250		370	620			5.5
WDN60300	60X300		420	720			6.2
WDN60400	60X400		520	920			7.3
WDN60500	60X500		620	1120			8.5
WDN70100	70X100	35	220	320	3/8"	39	4.9
WDN70150	70X150		270	420			5.6
WDN70200	70X200		320	520			6.3
WDN70250	70X250		370	620			7.1
WDN70300	70X300		420	720			7.8
WDN70400	70X400		520	920			9.3
WDN80500	70X500		620	1120			10.8

DOUBLE ACTING CYLINDER-POINT END

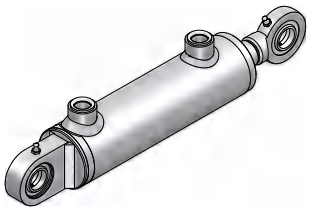

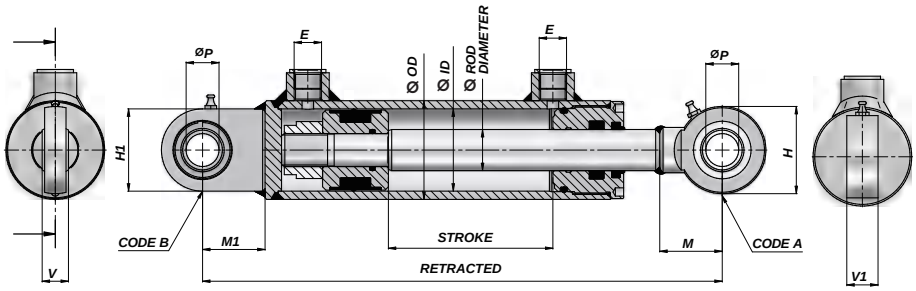

WDP SERIES-POINT END

MODEL	BORE & STROKE	ROD DIAMETER	DIMENSIONS		PORTS	ØP	WEIGHT (KG)
			RETRACTED	EXTENDED			
WDP40100	40X100	20	300	400	1/4”	16	2.8
WDP40150	40X150		350	500			3.2
WDP40200	40X200		400	600			3.6
WDP40250	40X250		450	700			4
WDP40300	40X300		500	800			4.4
WDP40350	40X350		550	900			4.8
WDP40400	40X400		600	1000			5.2
WDP40450	40X450		650	1100			5.6
WDP40500	40X500		700	1200			6
WDP50100	50X100	25	310	410	3/8”	20	3.8
WDP50150	50X150		360	510			4.4
WDP50200	50X200		410	610			4.9
WDP50250	50X250		460	710			5.4
WDP50300	50X300		510	810			6
WDP50350	50X350		560	910			6.4
WDP50400	50X400		610	1010			7
WDP50450	50X450		660	1110			7.5
WDP50500	50X500		710	1210			8
WDP60100	60X100	30	350	450	3/8”	25	5.9
WDP60150	60X150		400	550			6.6
WDP60200	60X200		450	650			7.3
WDP60250	60X250		500	750			8
WDP60300	60X300		550	850			8.6
WDP60350	60X350		600	950			9.3
WDP60400	60X400		650	1050			10
WDP60450	60X450		700	1150			10.7
WDP60500	60X500		750	1250			11.3
WDP70100	70X100	35	350	450	3/8”	25	7.2
WDP70150	70X150		400	550			8
WDP70200	70X200		450	650			8.8
WDP70250	70X250		500	750			9.7
WDP70300	70X300		550	850			10.5
WDP70350	70X350		600	950			11.5
WDP70400	70X400		650	1050			12.2
WDP70450	70X450		700	1150			13
WDP80500	70X500		750	1250			13.8
WDP80200	80X200	40	480	680	1/2"	30	12.8
WDP80250	80X250		530	780			13.8
WDP80300	80X300		580	880			15
WDP80400	80X400		680	1080			17.2
WDP80500	80X500		780	1280			19.5
WDP80600	80X600		880	1480			21

DOUBLE ACTING CYLINDER-CROSS TUBE END

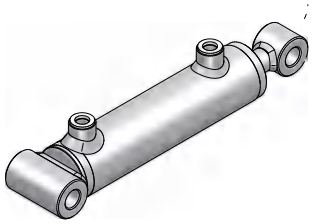

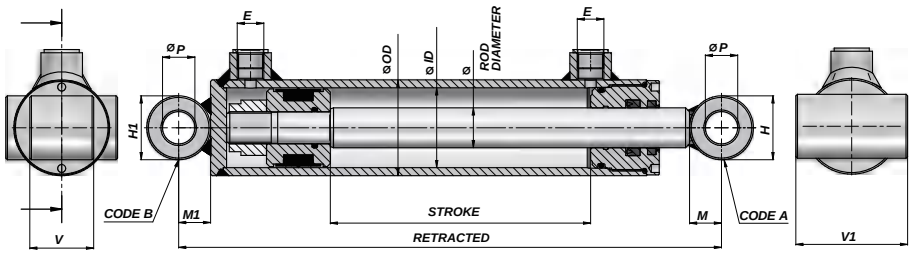

WDC SERIES-CROSS TUBE END

MODEL	BORE & STROKE	ROD DIAMETER	DIMENSIONS		PORTS	ØP	WEIGHT (KG)
			RETRACTED	EXTENDED			
WDC40100	40X100	20	260	360	1/4”	16.5	2.8
WDC40150	40X150		310	460			3.2
WDC40200	40X200		360	560			3.6
WDC40250	40X250		410	660			4
WDC40300	40X300		460	760			4.4
WDC40350	40X350		510	860			4.8
WDC40400	40X400		560	960			5.2
WDC40450	40X450		610	1060			5.6
WDC40500	40X500		660	1160			6
WDC50100	50X100	25	280	380	3/8”	20.25	4.1
WDC50150	50X150		330	480			4.7
WDC50200	50X200		380	580			5.2
WDC50250	50X250		430	680			5.8
WDC50300	50X300		480	780			6.3
WDC50350	50X350		530	880			6.8
WDC50400	50X400		580	980			7.4
WDC50450	50X450		630	1080			7.9
WDC50500	50X500		680	1180			8.4
WDC60100	60X100	30	300	400	3/8”	25.25	6.3
WDC60150	60X150		350	500			7
WDC60200	60X200		400	600			7.7
WDC60250	60X250		450	700			8.4
WDC60300	60X300		500	800			9
WDC60350	60X350		550	900			9.7
WDC60400	60X400		600	1000			10
WDC60450	60X450		650	1100			11
WDC60500	60X500		700	1200			11.5
WDC70100	70X100	35	300	400	3/8”	25.25	7.6
WDC70150	70X150		350	500			8.5
WDC70200	70X200		400	600			9.4
WDC70250	70X250		450	700			10.1
WDC70300	70X300		500	800			11
WDC70350	70X350		550	900			11.5
WDC70400	70X400		600	1000			12.5
WDC70450	70X450		650	1100			13.5
WDC80500	70X500		700	1200			14.2
WDC80200	80X200	40	450	650	1/2"	30.25	14.2
WDC80250	80X250		500	750			15.3
WDC80300	80X300		550	850			16.5
WDC80400	80X400		650	1050			19
WDC80500	80X500		750	1250			21
WDC80600	80X600		850	1450			24.5

TIE ROD CYLINDER

WEITAI HYDRAULIC CYLINDER



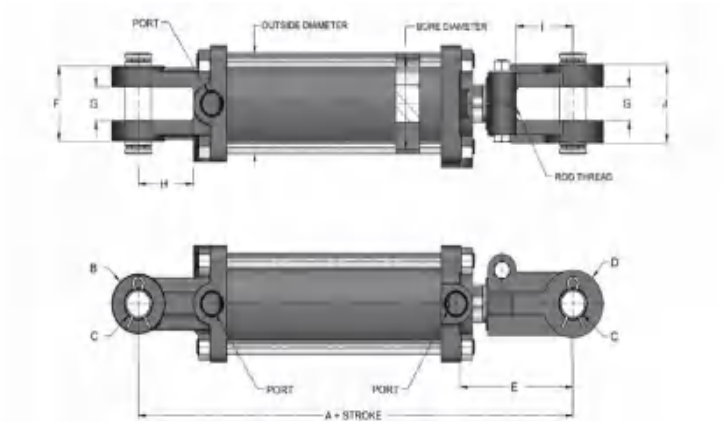

HYDRAULIC TIE-ROD CYLINDERS - 2500 PSI

PART NUMBER	CYLINDER BORE	OUTSIDE DIAMETER	ROD THREAD1	A	B	C	D	E	F	G	H	I	J	PORT
WTR2.5-20	2.00"	2.37"	1.125-12 UNF	10.25"	2.00"	1.01"	2.00"	3.75"	2.50"	1.12"	2.06"	2.12"	2.62"	3/8 NPT & SAE 8
WTR2.5-25	2.50"	2.87"	1.125-12 UNF	10.25"	2.00"	1.01"	2.25"	3.75"	2.50"	1.12"	2.06"	2.12"	2.62"	3/8 NPT & SAE 8
WTR2.5-30	3.00"	3.37"	1.25-12 UNF	10.25"	2.00"	1.01"	2.25"	3.75"	2.55"	1.12"	2.06"	2.12"	2.62"	1/2 NPT & SAE 8
WTR2.5-35	3.50"	3.87"	1.25-12 UNF	10.25"	2.25"	1.01"	2.25"	3.62"	2.50"	1.12"	2.06"	2.12"	2.62"	1/2 NPT & SAE 8
WTR2.5-40	4.00"	4.37"	1.25-12 UNF	10.25"	2.25"	1.01"	2.25"	3.56"	2.62"	1.12"	2.06"	2.12"	2.62"	1/2 NPT & SAE 8

*FOR 8.00" ASAE STROKE: A=12.25" AND FOR 16.00" ASAE STROKE: A=15.50"
*FOR 8.00" ASAE STROKE: E=5.75" (2.00" TO 3.00" BORE) E=5.62" (3.50" BORE) E=5.56" (4.00" BORE)
*FOR 16.00" ASAE STROKE: E=9.00" (3.00" BORE) E=8.87" (3.50" BORE) E=8.81" (4.00" BORE) E=7.43" (5.00" BORE)
*FOR TR2.5-2518 TO TR2.5-2536: ROD THREAD=1.250-12 UNF
*FOR TR2.5-4016-ASAE TO TR2.5-4036: D=2.50" J=2.75" ROD THREAD=1.500-12 UNF
*FOR 16.00" ASAE STROKE: C=1.26"
SEAL TEMPERATURE RANGE: -30℃/+100℃ (-22℉/+212℉)
SEAL MAXIMUM SPEED: 3 FT/SEC
MAXIMUM RETRACTED WORKING PRESSURE=2500PSI
RETRACTED AND STROKE TOLERANCE ±1/8"
DIMENSIONS AAND EARE FOR REFERENCES ONLY AS CLEVIS IS ADJUSTABLE

HYDRAULIC TIE-ROD CYLINDERS - 3000 PSI

PART NUMBER	CYLINDER BORE	OUTSIDE DIAMETER	ROD THREAD	A	B	C	D	E	F	G	H	I	J	PORT
WTR3-20	2.00"	2.50"	1.125-12 UNF	10.25"	2.00"	1.01"	2.00"	3.75"	2.50"	1.12"	2.06"	2.12"	2.62"	3/8 NPT OR SAE 8
WTR3-25	2.50"	3.00"	1.125-12 UNF	10.25"	2.00"	1.01"	2.00"	3.75"	2.50"	1.12"	2.06"	2.12"	2.62"	3/8 NPT OR SAE 8
WTR3-30	3.00"	3.50"	1.125-12 UNF	10.25"	2.25"	1.01"	2.25"	3.75"	2.25"	1.12"	2.06"	2.12"	2.62"	1/2 NPT OR SAE 8
WTR3-35	3.50"	4.00"	1.313-12 UNF	10.25"	2.50"	1.01"	2.52"	3.62"	2.62"	1.12"	2.06"	2.12"	2.75"	1/2 NPT OR SAE 8
WTR3-40	4.00"	4.50"	1.500-12 UNF	10.25"	2.50"	1.01"	2.50"	3.56"	2.62"	1.12"	2.06"	2.12"	2.75"	1/2 NPT OR SAE 8
WTR3-50	5.00"	5.50"	1.500-12 UNF	12.25"	2.75"	1.26"	2.75"	4.18"	3.50"	*	2.06"	2.12"	3.31"	1/2 NPT OR SAE 10

*FOR 8.00" ASAE STROKE: A=12.25" AND FOR 16.00" ASAE STROKE: A=15.50"
*FOR 8.00" ASAE STROKE: E=5.75" (2.00" TO 3.00" BORE) E=5.62" (3.50" BORE) E=5.56" (4.00" BORE)
*FOR 16.00" ASAE STROKE: E=9.00" (3.00" BORE) E=8.87" (3.50" BORE) E=8.81" (4.00" BORE) E=7.43" (5.00" BORE)
*FOR 16.00" ASAE STROKE: C=1.26"
SEAL TEMPERATURE RANGE: -30℃/+100℃ (-22℉/+212℉)
SEAL MAXIMUM SPEED: 3 FT/SEC
MAXIMUM RETRACTED WORKING PRESSURE=3000PSI
RETRACTED AND STROKE TOLERANCE ±1/8"
DIMENSIONS AAND EARE FOR REFERENCES ONLY AS CLEVIS IS ADJUSTABLE

HYDRAULIC TIE-ROD CYLINDERS - 2500 PSI

2500 PSI							
MODEL	BORE & STROKE	ROD DIAMETER	DIMENSIONS		PORTS	PIN SIZE	WEIGHT (LBS)
			RETRACTED	EXTENDED			
WTR2.5-2004	2"X4"	1 1/8"	14 1/4"	18 1/4"	3/8NPT	1"	16
WTR2.5-2006	2"X6"		16 1/4"	22 1/4"			17
WTR2.5-2008	2"X8"		18 1/4"	26 1/4"			19
WTR2.5-2008-ASAE	2"X8"		20 1/4"	28 1/4"			20
WTR2.5-2010	2"X10"		20 1/4"	30 1/4"			20
WTR2.5-2012	2"X12"		22 1/4"	34 1/4"			22
WTR2.5-2014	2"X14"		24 1/4"	38 1/4"			24
WTR2.5-2016	2"X16"		26 1/4"	42 1/4"			25
WTR2.5-2018	2"X18"		28 1/4"	46 1/4"			27
WTR2.5-2020	2"X20"		30 1/4"	50 1/4"			28
WTR2.5-2024	2"X24"		34 1/4"	58 1/4"			31
WTR2.5-2030	2"X30"		40 1/4"	70 1/4"			36
WTR2.5-2036	2"X36"		46 1/4"	82 1/4"			41
WTR2.5-2504	2.5"X4"	1 1/8"	16 1/4"	22 1/4"	3/8NPT	1"	19
WTR2.5-2506	2.5"X6"		16 1/4"	22 1/4"			21
WTR2.5-2508	2.5"X8"		18 1/4"	26 1/4"			23
WTR2.5-2508-ASAE	2.5"X8"		20 1/4"	28 1/4"			23
WTR2.5-2510	2.5"X10"		20 1/4"	30 1/4"			24
WTR2.5-2512	2.5"X12"		22 1/4"	34 1/4"			26
WTR2.5-2514	2.5"X14"		24 1/4"	38 1/4"			28
WTR2.5-2516	2.5"X16"		26 1/4"	42 1/4"			29
WTR2.5-2518	2.5"X18"	1 1/4"	28 1/4"	46 1/4"			32
WTR2.5-2520	2.5"X20"		30 1/4"	50 1/4"			34
WTR2.5-2524	2.5"X24"		34 1/4"	58 1/4"			38
WTR2.5-2530	2.5"X30"		40 1/4"	70 1/4"			43
WTR2.5-2536	2.5"X36"		46 1/4"	82 1/4"			49
WTR2.5-3004	3"X4"	1 1/4"	14 1/4"	18 1/4"	1/2 NPT	1"	24
WTR2.5-3006	3"X6"		16 1/4"	22 1/4"			26
WTR2.5-3008	3"X8"		18 1/4"	26 1/4"			28
WTR2.5-3008 -ASAE	3"X8"		20 1/4"	28 1/4"			29
WTR2.5-3010	3"X10"		20 1/4"	30 1/4"			30
WTR2.5-3012	3"X12"		22 1/4"	34 1/4"			33
WTR2.5-3014	3"X14"		24 1/4"	38 1/4"			35
WTR2.5-3016	3"X16"		26 1/4"	42 1/4"			37
WTR2.5-3016-ASAE	3"X16"	1 1/2"	31 1/2"	47 1/2"		1 1/4"	42
WTR2.5-3018	3"X18"		28 1/4"	46 1/4"		1"	42
WTR2.5-3020	3"X20"		30 1/4"	50 1/4"			44
WTR2.5-3024	3"X24"		34 1/4"	58 1/4"			49
WTR2.5-3030	3"X30"		40 1/4"	70 1/4"			57
WTR2.5-3036	3"X36"		46 1/4"	82 1/4"			65

HYDRAULIC TIE-ROD CYLINDERS - 2500 PSI

2500 PSI							
MODEL	BORE & STROKE	ROD DIAMETER	DIMENSIONS		PORTS	PIN SIZE	WEIGHT (LBS)
			RETRACTED	EXTENDED			
WTR2.5-3504	3.5"X 4"	1 1/4"	14 1/4"	18 1/4"	1/2 NPT	1"	29
WTR2.5-3506	3.5"X 6"		16 1/4"	22 1/4"			32
WTR2.5-3508	3.5"X 8"		18 1/4"	26 1/4"			34
WTR2.5-3508-ASAE	3.5"X 8"		20 1/4"	28 1/4"			35
WTR2.5-3510	3.5"X10"		20 1/4"	30 1/4"			37
WTR2.5-3512	3.5"X12"		22 1/4"	34 1/4"			39
WTR2.5-3514	3.5"X14"		24 1/4"	38 1/4"			42
WTR2.5-3516	3.5"X16"		26 1/4"	42 1/4"			44
WTR2.5-3516-ASAE	3.5"X16"	1 1/2"	31 1/2"	47 1/2"		1 1/4"	50
WTR2.5-3518	3.5"X18"	1 1/4"	28 1/4"	46 1/4"		1"	47
WTR2.5-3520	3.5"X20"		30 1/4"	50 1/4"			49
WTR2.5-3524	3.5"X24"	1 1/2"	34 1/4"	58 1/4"			58
WTR2.5-3530	3.5"X30"		40 1/4"	70 1/4"			66
WTR2.5-3536	3.5"X36"		46 1/4"	82 1/4"			74
WTR2.5-4004	4"X 4"	1 1/4"	14 1/4"	18 1/4"	1/2 NPT	1"	33
WTR2.5-4006	4"X 6"		16 1/4"	22 1/4"			36
WTR2.5-4008	4"X 8"		18 1/4"	26 1/4"			38
WTR2.5-4008-ASAE	4"X 8"		20 1/4"	28 1/4"			39
WTR2.5-4010	4"X10"		20 1/4"	30 1/4"			41
WTR2.5-4012	4"X12"		22 1/4"	34 1/4"			44
WTR2.5-4014	4"X14"		24 1/4"	38 1/4"			46
WTR2.5-4016	4"X16"		26 1/4"	42 1/4"			49
WTR2.5-4016-ASAE	4"X16"	2"	31 1/2"	47 1/2"		1 1/4"	63
WTR2.5-4018	4"X18"	1 1/2"	28 1/4"	46 1/4"		1"	55
WTR2.5-4020	4"X20"		30 1/4"	50 1/4"			58
WTR2.5-4024	4"X24"		34 1/4"	58 1/4"			64
WTR2.5-4024-175	4"X24"	1 3/4"	34 1/4"	58 1/4"			68
WTR2.5-4024-200	4"X24"	2"	34 1/4"	58 1/4"			73
WTR2.5-4030	4"X30"		40 1/4"	70 1/4"			84
WTR2.5-4036	4"X36"		46 1/4"	82 1/4"			95

HYDRAULIC TIE-ROD CYLINDERS - 3000 PSI

3000 PSI							
MODEL	BORE & STROKE	ROD DIAMETER	DIMENSIONS		PORTS	PIN SIZE	WEIGHT (LBS)
			RETRACTED	EXTENDED			
WTR3-2004	2"X4"	1 1/8"	14 1/4"	18 1/4"	3/8NPT & SAE#8	1"	17
WTR3-2006	2"X6"		16 1/4"	22 1/4"			19
WTR3-2008	2"X8"		18 1/4"	26 1/4"			21
WTR3-2008-ASAE	2"X8"		20 1/4"	28 1/4"			22
WTR3-2010	2"X10"		20 1/4"	30 1/4"			23
WTR3-2012	2"X12"		22 1/4"	34 1/4"			25
WTR3-2014	2"X14"		24 1/4"	38 1/4"			27
WTR3-2016	2"X16"		26 1/4"	42 1/4"			28
WTR3-2018	2"X18"		28 1/4"	46 1/4"			30
WTR3-2020	2"X20"		30 1/4"	50 1/4"			32
WTR3-2024	2"X24"		34 1/4"	58 1/4"			36
WTR3-2030	2"X30"		40 1/4"	70 1/4"			41
WTR3-2036	2"X36"		46 1/4"	82 1/4"			47
WTR3-2504	2.5"X4"	1 1/4"	14 1/4"	18 1/4"	3/8NPT & SAE#8	1"	22
WTR3-2506	2.5"X6"		16 1/4"	22 1/4"			24
WTR3 2508	2.5"X8"		18 1/4"	26 1/4"			26
WTR3-2508-ASAE	2.5"X8"		20 1/4"	28 1/4"			27
WTR3-2510	2.5"X10"		20 1/4"	30 1/4"			29
WTR3-2512	2.5"X12"		22 1/4"	34 1/4"			31
WTR3-2514	2.5"X14"		24 1/4"	38 1/4"			33
WTR3-2516	2.5"X16"		26 1/4"	42 1/4"			36
WTR3-2518	2.5"X18"		28 1/4"	46 1/4"			38
WTR3-2520	2.5"X20"		30 1/4"	50 1/4"			41
WTR3-2524	2.5"X24"		34 1/4"	58 1/4"			45
WTR3-2530	2.5"X30"		40 1/4"	70 1/4"			52
WTR3-2536	2.5"X36"		46 1/4"	82 1/4"			60
WTR3-3004	3"X4"	1 1/4"	14 1/4"	18 1/4"	1/2 NPT & SAE#8	1"	26
WTR3-3006	3"X6"		16 1/4"	22 1/4"			29
WTR3-3008	3"X8"		18 1/4"	26 1/4"			32
WTR3-3008-ASAE	3"X8"		20 1/4"	28 1/4"			32
WTR3-3010	3"X10"		20 1/4"	30 1/4"			34
WTR3-3012	3"X12"		22 1/4"	34 1/4"			37
WTR3-3014	3"X14"		24 1/4"	38 1/4"			40
WTR3-3016	3"X16"		26 1/4"	42 1/4"			43
WTR3-3016-ASAE	3"X16"		31 1/2"	47 1/2"		1 1/4"	45
WTR3-3018	3"X18"		28 1/4"	46 1/4"		1"	45
WTR3-3020	3"X20"		30 1/4"	50 1/4"			48
WTR3-3024	3"X24"		34 1/4"	58 1/4"			53
WTR3-3030	3"X30"		40 1/4"	70 1/4"			62
WTR3-3036	3"X36"		46 1/4"	82 1/4"			70
WTR3-3504	3.5"X 4"		14 1/4"	18 1/4"			34

HYDRAULIC TIE-ROD CYLINDERS - 3000 PSI

3000 PSI							
MODEL	BORE & STROKE	ROD DIAMETER	DIMENSIONS		PORTS	PIN SIZE	WEIGHT (LBS)
			RETRACTED	EXTENDED			
WTR3-3506	3.5"X 6"	1 3/8“	16 1/4"	22 1/4"	1/2 NPT & SAE#8	1"	37
WTR3-3508	3.5"X 8"		18 1/4"	26 1/4"			40
WTR3-3508-ASAE	3.5"X 8"		20 1/4"	28 1/4"			41
WTR3-3510	3.5"X 10"		20 1/4"	30 1/4"			43
WTR3-3512	3.5"X 12"		22 1/4"	34 1/4"			47
WTR3-3514	3.5"X 14"		24 1/4"	38 1/4"			50
WTR3-3516	3.5"X 16"		26 1/4"	42 1/4"			53
WTR3-3516-ASAE	3.5"X 16"		31 1/2"	47 1/2"		1 1/4"	56
WTR3-3518	3.5"X18"		28 1/4"	46 1/4"		1"	56
WTR3-3520	3.5"X20"		30 1/4"	50 1/4"			60
WTR3-3524	3.5"X24"		34 1/4"	58 1/4"			66
WTR3-3530	3.5"X30"		40 1/4"	70 1/4"			76
WTR3-3536	3.5"X36"		46 1/4"	82 1/4"			85
WTR3-4004	4"X 4"	1 3/4"	14 1/4"	18 1/4"	1/2 NPT & SAE#8	1"	41
WTR3-4006	4"X 6"		16 1/4"	22 1/4"			45
WTR3-4008	4"X 8"		18 1/4"	26 1/4"			49
WTR3-4008-ASAE	4"X 8"		20 1/4"	28 1/4"			50
WTR3-4010	4"X 10"		20 1/4"	30 1/4"			52
WTR3-4012	4"X 12"		22 1/4"	34 1/4"			56
WTR3-4014	4"X 14"		24 1/4"	38 1/4"			60
WTR3-4016	4"X 16"		26 1/4"	42 1/4"			64
WTR3-4016-ASAE	4"X 16"		31 1/2"	47 1/2"		1 1/4"	68
WTR3-4018	4"X 18"		28 1/4"	46 1/4"		1"	68
WTR3-4020	4"X 20"		30 1/4"	50 1/4"			72
WTR3-4024	4"X 24"		34 1/4"	58 1/4"			80
WTR3-4030	4"X30"		40 1/4"	70 1/4"			92
WTR3-4036	4"X36"		46 1/4"	82 1/4"			104
WTR3-5004	5"X 4"	2“	16 1/4"	20 1/4"	1/2 NPT & SAE#10	1 1/4"	72
WTR3-5006	5"X 6"		18 1/4"	24 1/4"			76
WTR3-5008	5"X 8"		20 1/4"	26 1/4"			79
WTR3-5008-ASAE	5"X 8"		20 1/4"	28 1/4"			81
WTR3-5010	5"X 10"		22 1/4"	32 1/4"			86
WTR3-5012	5"X 12"		24 1/4"	36 1/4"			91
WTR3-5014	5"X 14"		26 1/4"	40 1/4"			96
WTR3-5016	5"X 16"		28 1/4"	44 1/4"			101
WTR3-5016-ASAE	5"X 16"		31 1/4"	47 1/4"			104
WTR3-5018	5"X 18"		30 1/4"	48 1/4"			106
WTR3-5020	5"X 20"		32 1/4"	52 1/4"			112
WTR3-5024	5"X 24"		36 1/4"	60 1/4"			122
WTR3-5030	5"X30"		42 1/4"	72 1/4"			137
WTR3-5036	5"X36"		48 1/4"	84 1/4"			153

WELDED HYDRAULIC CYLINDER

WEITAI HYDRAULIC CYLINDER



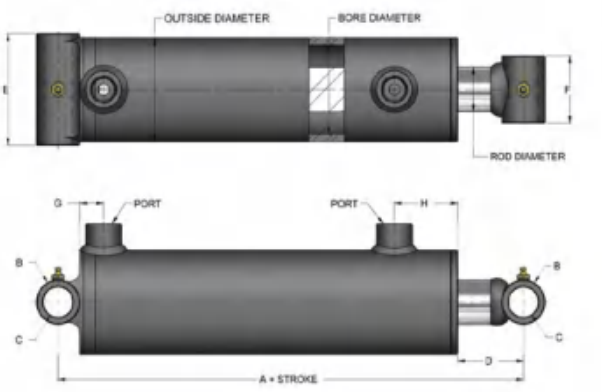

WELDED HYDRAULIC CYLINDER – CROSS TUBE

PART NUMBER	CYLINDER BORE	OUTSIDE DIAMETER	ROD DIAMETER	A	B	C	D	E	F	G	H	PORT
WBU15	1.50”	2.00”	1.00”	8.00”	1.25”	0.76”	2.62”	2.25”	2.00”	1.06”	1.87”	1/4NPT
WBU20	2.00”	2.50”	1.25”	8.00”	1.50”	1.01”	2.25”	2.75”	2.25”	1.00”	2.06”	3/8NPT
WBU25	2.50”	3.00”	1.50”	8.00”	1.50”	1.01”	2.25”	3.25”	2.25”	0.81”	2.18”	1/2NPT
WBU30	3.00”	3.50”	1.50”	8.00”	1.50”	1.01”	2.25”	3.75”	2.25”	0.81”	2.18”	1/2NPT
WBU35	3.50”	4.00”	1.75”	10.00”	2.00”	1.26”	4.00”	4.25”	2.25”	0.81”	2.18”	1/2NPT
WBU40	4.00”	4.50”	2.00”	10.00”	2.25”	1.51”	3.75”	4.75”	2.50”	0.81”	2.18”	1/2NPT
WBU50	5.00”	5.50”	2.50”	12.00”	3.00”	*1.76”	3.50”	5.75”	3.25”	1.25”	2.75”	1/2NPT

*FOR 5.00” BORE: 2.00” PINS ARE AVAILABLE WITH REMOVABLE BUSHING
FOR 1.50” TO 4.00” BORE SAE PORTS ARE AVAILABLE
SEAL TEMPERATURE RANGE: -30℃/+100℃ (-22℉/+212℉)

SEAL MAXIMUM SPEED: 3 FT/SEC
MAXIMUM RETRACTED WORKING PRESSURE= 3000PSI
RETRACTED AND STROKE TOLERANCE ±1/8”

CROSS TUBE

MODEL	BORE & STROKE	ROD DIAMETER	DIMENSIONS		PORTS	PIN SIZE	WEIGHT (LBS)
			RETRACTED	EXTENDED			
WBU1504	1.5"X4"	1"	12"	16"	1/4NPT	3/4"	8
WBU1506	1.5"X6"		14"	20"			9
WBU1508	1.5"X8"		16"	24"			10
WBU1510	1.5"X10"		18"	28"			11
WBU1512	1.5"X12"		20"	32"			13
WBU1514	1.5"X14"		22"	36"			14
WBU1516	1.5"X16"		24"	40"			15
WBU1518	1.5"X18"		26"	44"			16
WBU1520	1.5"X20"		28"	48"			18
WBU1524	1.5"X24"		32"	56"			20
WBU2004	2"X4"	1 1/4"	12"	16"	3/8NPT	1"	12
WBU2006	2"X6"		14"	20"			13
WBU2008	2"X8"		16"	24"			15
WBU2010	2"X10"		18"	28"			17
WBU2012	2"X12"		20"	32"			19
WBU2014	2"X14"		22"	36"			20
WBU2016	2"X16"		24"	40"			22
WBU2018	2"X18"		26"	44"			24
WBU2020	2"X20"		28"	48"			25

WELDED HYDRAULIC CYLINDER – CROSS TUBE

CROSS TUBE							
MODEL	BORE & STROKE	ROD DIAMETER	DIMENSIONS		PORTS	PIN SIZE	WEIGHT (LBS)
			RETRACTED	EXTENDED			
WBU2024	2"X24"	1 1/4"	32"	56"	3/8NPT	1"	29
WBU2028	2"X28"		36"	64"			32
WBU2030	2"X30"		38"	68"			34
WBU2032	2"X32"		40"	72"			36
WBU2036	2"X36"		44"	80"			39
WBU2040	2"X40"		48"	88"			42
WBU2048	2"X48"		56"	104"			49
WBU2504	2.5"X4"	1 1/2"	12"	16"	1/2NPT	1"	16
WBU2506	2.5"X6"		14"	20"			18
WBU2508	2.5"X8"		16"	24"			20
WBU2510	2.5"X10"		18"	28"			22
WBU2512	2.5"X12"		20"	32"			25
WBU2514	2.5"X14"		22"	36"			27
WBU2516	2.5"X16"		24"	40"			29
WBU2518	2.5"X18"		26"	44"			31
WBU2520	2.5"X20"		28"	48"			34
WBU2524	2.5"X24"		32"	56"			38
WBU2528	2.5"X28"		36"	64"			43
WBU2530	2.5"X30"		38"	68"			45
WBU2532	2.5"X32"		40"	72"			47
WBU2536	2.5"X36"		44"	80"			51
WBU2540	2.5"X40"		48"	88"			56
WBU2548	2.5"X48"		56"	104"			65
WBU3004	3"X4"		12"	16"			19
WBU3006	3"X6"		14"	20"			22
WBU3008	3"X8"		16"	24"			24
WBU3010	3"X10"		18"	28"			27
WBU3012	3"X12"		20"	32"			29
WBU3014	3"X14"		22"	36"			32
WBU3016	3"X16"		24"	40"			34
WBU3018	3"X18"		26"	44"			36
WBU3020	3"X20"		28"	48"			39
WBU3024	3"X24"		32"	56"			44
WBU3028	3"X28"		36"	64"			49
WBU3030	3"X30"		38"	68"			51
WBU3032	3"X32"		40"	72"			54
WBU3036	3"X36"		44"	80"			59
WBU3040	3"X40"		48"	88"			63
WBU3048	3"X48"		56"	104"			73
WBU3504	3.5"X4"	1 3/4"	14"	18"	1/2NPT	1 1/4"	27
WBU3506	3.5"X6"		16"	22"			30
WBU3508	3.5"X8"		18"	26"			33
WBU3510	3.5"X10"		20"	30"			36
WBU3512	3.5"X12"		22"	34"			39

WELDED HYDRAULIC CYLINDER – CROSS TUBE

CROSS TUBE							
MODEL	BORE & STROKE	ROD DIAMETER	DIMENSIONS		PORTS	PIN SIZE	WEIGHT (LBS)
			RETRACTED	EXTENDED			
WBU3514	3.5"X14"	1 3/4"	24"	38"	1/2NPT	1 1/4"	42
WBU3516	3.5"X16"		26"	42"			45
WBU3518	3.5"X18"		28"	46"			48
WBU3520	3.5"X20"		30"	50"			51
WBU3524	3.5"X24"		34"	58"			57
WBU3528	3.5"X28"		38"	66"			64
WBU3530	3.5"X30"		40"	70"			67
WBU3532	3.5"X32"		42"	74"			70
WBU3536	3.5"X36"		46"	82"			76
WBU3540	3.5"X40"		50"	90"			82
WBU3548	3.5"X48"		58"	106"			94
WBU4004	4"X4"	2"	14"	18"	1/2NPT	1 1/2"	34
WBU4006	4"X6"		16"	22"			38
WBU4008	4"X8"		18"	26"			41
WBU4010	4"X10"		20"	30"			45
WBU4012	4"X12"		22"	34"			49
WBU4014	4"X14"		24"	38"			52
WBU4016	4"X16"	2"	26"	42"	1/2NPT	1 1/2"	56
WBU4018	4"X18"		28"	46"			60
WBU4020	4"X20"		30"	50"			63
WBU4024	4"X24"		34"	58"			71
WBU4028	4"X28"		38"	66"			78
WBU4030	4"X30"		40"	70"			82
WBU4032	4"X32"		42"	74"			85
WBU4036	4"X36"		46"	82"			93
WBU4040	4"X40"		50"	90"			100
WBU4048	4"X48"		58"	106"			115
WBU5004	5"X 4"	2 1/2"	16"	20"	SAE#12	1 3/4"	65
WBU5006	5"X 6"		18"	24"			70
WBU5008	5"X 8"		20"	28"			75
WBU5010	5"X10"		22"	32"			80
WBU5012	5"X12"		24"	36"			85
WBU5014	5"X14"		26"	40"			90
WBU5016	5"X16"		28"	44"			96
WBU5018	5"X18"		30"	48"			101
WBU5020	5"X 20"		32"	52"			106
WBU5024	5"X24"		36"	60"			116
WBU5028	5"X28"		40"	68"			126
WBU5030	5"X30"		42"	72"			131
WBU5032	5"X32"		44"	76"			137
WBU5036	5"X36"		48"	84"			147
WBU5040	5"X40"		52"	92"			157
WBU5048	5"X48"		60"	108"			178

WELDED HYDRAULIC CYLINDER – CLEVIS END



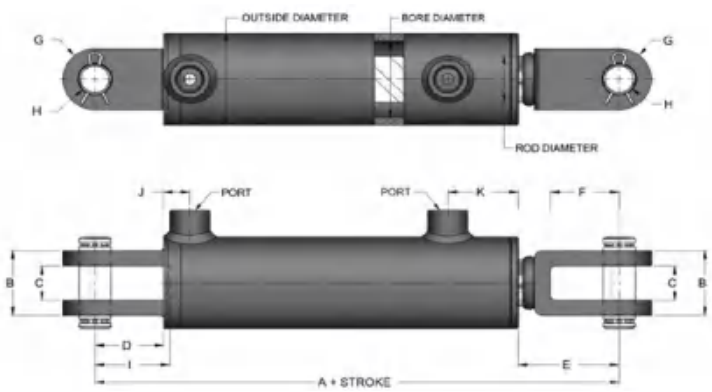

PART NUMBER	CYLINDER BORE	OUTSIDE DIAMETER	ROD DIAMETER	A	B	C	D	E	F	G	H	I	J	K	PORT
WCL15	1.50”	2.00”	1.00”	8.25”	1.62”	0.87”	1.37”	2.25”	1.37”	1.50”	0.76”	-	0.93”	1.87”	1/4NPT
WCL20	2.00”	2.50”	1.25”	10.25”	2.12”	1.12”	2.12”	3.12”	2.12”	2.00”	1.01”	-	1.00”	2.06”	3/8NPT
WCL25	2.50”	3.00”	1.50”	10.25”	2.12”	1.12”	2.12”	3.12”	2.12”	2.00”	1.01”	-	0.81”	2.18”	1/2NPT
WCL30	3.00”	3.50”	1.50”	10.25”	2.12”	1.12”	2.12”	3.12”	2.12”	2.00”	1.01”	-	0.81”	2.18”	1/2NPT
WCL35	3.50”	4.00”	1.75”	10.25”	2.37”	1.12”	2.00”	3.12”	2.12”	2.00”	1.01”	2.12”	0.93”	2.18”	1/2NPT
WCL40	4.00”	4.50”	2.00”	10.25”	2.37”	1.12”	1.75”	3.12”	2.00”	2.00”	1.01”	2.00”	1.06”	2.18”	1/2NPT
WCL50	5.00”	5.50”	2.50”	13.00”	3.12”	1.62”	2.25”	3.62”	2.25”	3.00”	1.51”	-	1.37”	2.75”	SAE 12

*FOR 8.00” ASAE STROKE: A=12.25”
SEAL TEMPERATURE RANGE: -30℃/+100℃ (-22℉/+212℉)
MAXIMUM RETRACTED WORKING PRESSURE 3000PSI
DIMENSIONS A AND E ARE FOR REFERENCES ONLY AS CLEVIS IS ADJUSTABLE
*FOR 8.00” ASAE STROKE: E=6.50” (1.50” BORE) E=5.62” (2.00” TO 4.00” BORE)
SEAL MAXIMUM SPEED: 3 FT/SEC
RETRACTED AND STROKE TOLERANCE ±1/8”

Clevis End

MODEL	BORE & STROKE	ROD DIAMETER	DIMENSIONS		PORTS	PIN SIZE	WEIGHT (LBS)
			RETRACTED	EXTENDED			
WCL1504	1.5"X4"	1"	12 1/4"	16 1/4"	1/4NPT	3/4"	8
WCL1506	1.5"X6"		14 1/4"	20 1/4"			9
WCL1508	1.5"X8"		16 1/4"	24 1/4"			11
WCL1510	1.5"X10"		18 1/4"	28 1/4"			12
WCL1512	1.5"X12"		20 1/4"	32 1/4"			13
WCL1514	1.5"X14"		22 1/4"	36 1/4"			14
WCL1516	1.5"X16"		24 1/4"	40 1/4"			15
WCL1518	1.5"X18"		26 1/4"	44 1/4"			17
WCL1520	1.5"X20"		28 1/4"	48 1/4"			18
WCL1524	1.5"X24"		32 1/4"	56 1/4"			20
WCL2004	2"X4"	1 1/4"	14 1/4"	18 1/4"	3/8NPT	1"	14
WCL2006	2"X6"		16 1/4"	22 1/4"			16
WCL2008	2"X8"		20 1/4"	28 1/4"			18
WCL2010	2"X10"		20 1/4"	30 1/4"			19
WCL2012	2"X12"		22 1/4"	34 1/4"			21
WCL2014	2"X14"		24 1/4"	38 1/4"			23
WCL2016	2"X16"		26 1/4"	42 1/4"			25
WCL2018	2"X18"		28 1/4"	46 1/4"			26
WCL2020	2"X20"		30 1/4"	50 1/4"			28
WCL2024	2"X24"		34 1/4"	58 1/4"			31
WCL2028	2"X28"		38 1/4"	66 1/4"			35
WCL2030	2"X30"		40 1/4"	70 1/4"			36
WCL2032	2"X32"		42 1/4"	74 1/4"			38

WELDED HYDRAULIC CYLINDER – CLEVIS END

Clevis End

MODEL	BORE & STROKE	ROD DIAMETER	DIMENSIONS		PORTS	PIN SIZE	WEIGHT (LBS)
			RETRACTED	EXTENDED			
WCL2034	2"X34"		44 1/4"	78 1/4"			40
WCL2036	2"X36"		46 1/4"	82 1/4"			42
WCL2040	2"X40"		50 1/4"	90 1/4"			45
WCL2048	2"X48"		58 1/4"	106 1/4"			52
WCL2504	2.5"X4"		14 1/4"	18 1/4"			18
WCL2506	2.5"X6"		16 1/4"	22 1/4"			20
WCL2508	2.5"X8"		20 1/4"	28 1/4"			24
WCL2510	2.5"X10"		20 1/4"	30 1/4"			25
WCL2512	2.5"X12"		22 1/4"	34 1/4"			27
WCL2514	2.5"X14"		24 1/4"	38 1/4"			29
WCL2516	2.5"X16"		26 1/4"	42 1/4"			32
WCL2518	2.5"X18"	1 1/2"	28 1/4"	46 1/4"	1/2NPT	1"	34
WCL2520	2.5"X20"		30 1/4"	50 1/4"			36
WCL2524	2.5"X24"		34 1/4"	58 1/4"			40
WCL2528	2.5"X28"		38 1/4"	66 1/4"			45
WCL2530	2.5"X30"		40 1/4"	70 1/4"			47
WCL2532	2.5"X32"		42 1/4"	74 1/4"			49
WCL2534	2.5"X34"		44 1/4"	78 1/4"			52
WCL2536	2.5"X36"		46 1/4"	82 1/4"			54
WCL2540	2.5"X40"		50 1/4"	90 1/4"			58
WCL2548	2.5"X48"		58 1/4"	106 1/4"			67
WCL3004	3"X4"		14 1/4"	18 1/4"			22
WCL3006	3"X6"		16 1/4"	22 1/4"			24
WCL3008	3"X8"		20 1/4"	28 1/4"			27
WCL3010	3"X10"		20 1/4"	30 1/4"			29
WCL3012	3"X12"		22 1/4"	34 1/4"			31
WCL3014	3"X14"		24 1/4"	38 1/4"			34
WCL3016	3"X16"		26 1/4"	42 1/4"			36
WCL3018	3"X18"		28 1/4"	46 1/4"			39
WCL3020	3"X20"	1 1/2"	30 1/4"	50 1/4"	1/2NPT	1"	41
WCL3024	3"X24"		34 1/4"	58 1/4"			46
WCL3028	3"X28"		38 1/4"	66 1/4"			51
WCL3030	3"X30"		40 1/4"	70 1/4"			53
WCL3032	3"X32"		42 1/4"	74 1/4"			56
WCL3034	3"X34"		44 1/4"	78 1/4"			58
WCL3036	3"X36"		46 1/4"	82 1/4"			61
WCL3040	3"X40"		50 1/4"	90 1/4"			66
WCL3048	3"X48"		58 1/4"	106 1/4"			75
WCL3504	3.5"X4"		14 1/4"	18 1/4"			27
WCL3506	3.5"X6"		16 1/4"	22 1/4"			30
WCL3508	3.5"X8"		20 1/4"	28 1/4"			35
WCL3510	3.5"X10"	1 3/4"	20 1/4"	30 1/4"	1/2NPT	1"	36
WCL3512	3.5"X12"		22 1/4"	34 1/4"			39
WCL3514	3.5"X14"		24 1/4"	38 1/4"			42
WCL3516	3.5"X16"		26 1/4"	42 1/4"			46

WELDED HYDRAULIC CYLINDER – CLEVIS END

Clevis End							
MODEL	BORE & STROKE	ROD DIAMETER	DIMENSIONS		PORTS	PIN SIZE	WEIGHT (LBS)
			RETRACTED	EXTENDED			
WCL3518	3.5"X18"	1 3/4"	28 1/4"	46 1/4"	1/2NPT	1"	49
WCL3520	3.5"X20"		30 1/4"	50 1/4"			52
WCL3524	3.5"X24"		34 1/4"	58 1/4"			58
WCL3528	3.5"X28"		38 1/4"	66 1/4"			64
WCL3530	3.5"X30"		40 1/4"	70 1/4"			67
WCL3532	3.5"X32"		42 1/4"	74 1/4"			70
WCL3534	3.5"X34"		44 1/4"	78 1/4"			73
WCL3536	3.5"X36"		46 1/4"	82 1/4"			76
WCL3540	3.5"X40"		50 1/4"	90 1/4"			82
WCL3548	3.5"X48"		58 1/4"	106 1/4"			94
WCL4004	4"X4"	2"	14 1/4"	18 1/4"	1/2NPT	1"	33
WCL4006	4"X6"		16 1/4"	22 1/4"			37
WCL4008	4"X8"		20 1/4"	28 1/4"			42
WCL4010	4"X10"		20 1/4"	30 1/4"			44
WCL4012	4"X12"	2"	22 1/4"	34 1/4"	1/2NPT	1"	48
WCL4014	4"X14"		24 1/4"	38 1/4"			52
WCL4016	4"X16"		26 1/4"	42 1/4"			55
WCL4018	4"X18"		28 1/4"	46 1/4"			59
WCL4020	4"X20"		30 1/4"	50 1/4"			63
WCL4024	4"X24"		34 1/4"	58 1/4"			70
WCL4028	4"X28"		38 1/4"	66 1/4"			77
WCL4030	4"X30"		40 1/4"	70 1/4"			81
WCL4032	4"X32"		42 1/4"	74 1/4"			85
WCL4034	4"X34"		44 1/4"	78 1/4"			89
WCL4036	4"X36"		46 1/4"	82 1/4"			92
WCL4040	4"X40"		50 1/4"	90 1/4"			100
WCL4048	4"X48"		58 1/4"	106 1/4"			114
WCL5004	5"X4"	2 1/2"	17"	21"	SAE#12	1 1/2"	64
WCL5006	5"X6"		19"	25"			69
WCL5008	5"X8"		21"	29"			74
WCL5010	5"X10"		23"	33"			79
WCL5012	5"X12"		25"	37"			84
WCL5014	5"X14"		27"	41"			89
WCL5016	5"X16"		29"	45"			95
WCL5018	5"X18"		31"	49"			100
WCL5020	5"X20"		33"	53"			105
WCL5024	5"X24"		37"	61"			115
WCL5028	5"X28"		41"	69"			125
WCL5030	5"X30"		43"	73"			130
WCL5032	5"X32"		45"	77"			136
WCL5034	5"X34"		47"	81"			141
WCL5036	5"X36"		49"	85"			146
WCL5040	5"X40"		53"	93"			156
WCL5048	5"X48"		61"	109"			177

WELDED HYDRAULIC CYLINDER – ADJUSTABLE CLEVIS END



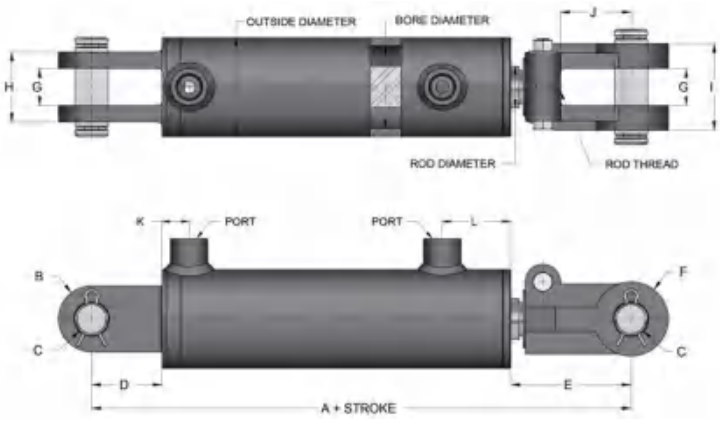

WELDED HYDRAULIC CYLINDER – ADJUSTABLE CLEVIS END

PART NUMBER	CYLINDER BORE	OUTSIDE DIAMETER	ROD DIAMETER	A	B	C	D	E	F	G	H	I	J	K	PORT
WTCL15	1.50”	2.00”	1.00”	8.25”	1.62”	0.87”	1.37”	2.25”	1.37”	1.50”	0.76”	-	0.93”	1.87”	SAE 4
WTCL20	2.00”	2.50”	1.25”	10.25”	2.12”	1.12”	2.12”	3.12”	2.12”	2.00”	1.01”	-	1.00”	2.06”	SAE6
WTCL25	2.50”	3.00”	1.50”	10.25”	2.12”	1.12”	2.12”	3.12”	2.12”	2.00”	1.01”	-	0.81”	2.18”	SAE 8
WTCL30	3.00”	3.50”	1.50”	10.25”	2.12”	1.12”	2.12”	3.12”	2.12”	2.00”	1.01”	-	0.81”	2.18”	SAE 8
WTCL35	3.50”	4.00”	1.75”	10.25”	2.37”	1.12”	2.00”	3.12”	2.12”	2.00”	1.01”	2.12”	0.93”	2.18”	SAE 8
WTCL40	4.00”	4.50”	2.00”	10.25”	2.37”	1.12”	1.75”	3.12”	2.00”	2.00”	1.01”	2.00”	1.06”	2.18”	SAE 8

*FOR 8.00” ASAE STROKE: A=12.25”

SEAL TEMPERATURE RANGE: -30℃/+100℃ (-22℉/+212℉)

MAXIMUM RETRACTED WORKING PRESSURE 3000PSI

RETRACTED AND STROKE TOLERANCE ±1/8”

DIMENSIONS A AND E ARE FOR REFERENCES ONLY AS CLEVIS IS ADJUSTABLE

*FOR 8.00” ASAE STROKE: E=6.50” (1.50” BORE) E=5.62” (2.00” TO 4.00” BORE)

SEAL MAXIMUM SPEED: 3 FT/SEC

Adjustable Clevis End

MODEL	BORE & STROKE	ROD DIAMETER	DIMENSIONS		PORTS	PIN SIZE	WEIGHT (LBS)
			RETRACTED	EXTENDED			
WTCL1504	1.5"X4"	1"	14 1/4"	18 1/4"	SAE#6	3/4"	10
WTCL1506	1.5"X6"		16 1/4"	22 1/4"			11
WTCL1508	1.5"X8"		18 1/4"	26 1/4"			12
WTCL1508-ASAE	1.5"X8"		20 1/4"	28 1/4"			13
WTCL1510	1.5"X10"		20 1/4"	30 1/4"			13
WTCL1512	1.5"X12"		22 1/4"	34 1/4"			15
WTCL1514	1.5"X14"		24 1/4"	38 1/4"			16
WTCL1516	1.5"X16"		26 1/4"	42 1/4"			17
WTCL1518	1.5"X18"		28 1/4"	46 1/4"			18
WTCL1520	1.5"X20"		30 1/4"	50 1/4"			20
WTCL1524	1.5"X24"		34 1/4"	58 1/4"			22
WTCL1528	1.5"X28"		38 1/4"	66 1/4"			25
WTCL1530	1.5"X30"		40 1/4"	70 1/4"			26
WTCL1532	1.5"X32"		42 1/4"	74 1/4"			27
WTCL1534	1.5"X34"		44 1/4"	78 1/4"			28
WTCL1536	1.5"X36"		46 1/4"	82 1/4"			29
WTCL2004	2"X4"		14 1/4"	18 1/4"			16
WTCL2006	2"X6"		16 1/4"	22 1/4"			17
WTCL2008	2"X8"		18 1/4"	26 1/4"			19

WELDED HYDRAULIC CYLINDER – ADJUSTABLE CLEVIS END

Adjustable Clevis End							
MODEL	BORE & STROKE	ROD DIAMETER	DIMENSIONS		PORTS	PIN SIZE	WEIGHT (LBS)
			RETRACTED	EXTENDED			
WTCL2008-ASAE	2"X8"	1 1/8"	20 1/4"	28 1/4"	SAE#8	1"	20
WTCL2010	2"X10"		20 1/4"	30 1/4"			20
WTCL2012	2"X12"		22 1/4"	34 1/4"			22
WTCL2014	2"X14"		24 1/4"	38 1/4"			24
WTCL2016	2"X16"		26 1/4"	42 1/4"			25
WTCL2018	2"X18"		28 1/4"	46 1/4"			27
WTCL2020	2"X20"		30 1/4"	50 1/4"			28
WTCL2024	2"X24"		34 1/4"	58 1/4"			31
WTCL2028	2"X28"		38 1/4"	66 1/4"			35
WTCL2030	2"X30"		40 1/4"	70 1/4"			36
WTCL2032	2"X32"		42 1/4"	74 1/4"			38
WTCL2034	2"X34"		44 1/4"	78 1/4"			39
WTCL2036	2"X36"		46 1/4"	82 1/4"			41
WTCL2504	2.5"X4"	1 1/4"	14 1/4"	18 1/4"	SAE#8	1"	19
WTCL2506	2.5"X6"		16 1/4"	22 1/4"			21
WTCL2508	2.5"X8"		18 1/4"	26 1/4"			23
WTCL2508-ASAE	2.5"X8"		20 1/4"	28 1/4"			23
WTCL2510	2.5"X10"		20 1/4"	30 1/4"			24
WTCL2512	2.5"X12"		22 1/4"	34 1/4"			26
WTCL2514	2.5"X14"		24 1/4"	38 1/4"			28
WTCL2516	2.5"X16"		26 1/4"	42 1/4"			30
WTCL2518	2.5"X18"		28 1/4"	46 1/4"			32
WTCL2520	2.5"X20"		30 1/4"	50 1/4"			34
WTCL2524	2.5"X24"		34 1/4"	58 1/4"			38
WTCL2528	2.5"X28"		38 1/4"	66 1/4"			42
WTCL2530	2.5"X30"		40 1/4"	70 1/4"			44
WTCL2532	2.5"X32"		42 1/4"	74 1/4"			46
WTCL2534	2.5"X34"		44 1/4"	78 1/4"			48
WTCL2536	2.5"X36"		46 1/4"	82 1/4"			49
WTCL3004	3"X4"	1 1/2"	14 1/4"	18 1/4"	SAE#8	1"	24
WTCL3006	3"X6"		16 1/4"	22 1/4"			26
WTCL3008	3"X8"		18 1/4"	26 1/4"			26
WTCL3008-ASAE	3"X8"		20 1/4"	28 1/4"			29
WTCL3010	3"X10"		20 1/4"	30 1/4"			31
WTCL3012	3"X12"		22 1/4"	34 1/4"			34
WTCL3014	3"X14"		24 1/4"	38 1/4"			36
WTCL3016	3"X16"		26 1/4"	42 1/4"			39
WTCL3018	3"X18"		28 1/4"	46 1/4"			41
WTCL3020	3"X20"		30 1/4"	50 1/4"			43
WTCL3024	3"X24"		34 1/4"	58 1/4"			48
WTCL3028	3"X28"		38 1/4"	66 1/4"			53

WELDED HYDRAULIC CYLINDER – ADJUSTABLE CLEVIS END

Adjustable Clevis End

MODEL	BORE & STROKE	ROD DIAMETER	DIMENSIONS		PORTS	PIN SIZE	WEIGHT (LBS)
			RETRACTED	EXTENDED			
WTCL3030	3"X30"		40 1/4"	70 1/4"			56
WTCL3032	3"X32"		42 1/4"	74 1/4"			58
WTCL3034	3"X34"		44 1/4"	78 1/4"			61
WTCL3036	3"X36"		46 1/4"	82 1/4"			63
WTCL3504	3.5"X4"		14 1/4"	18 1/4"			29
WTCL3506	3.5"X6"		16 1/4"	22 1/4"			32
WTCL3508	3.5"X8"		18 1/4"	26 1/4"			35
WTCL3510	3.5"X10"		20 1/4"	30 1/4"			36
WTCL3512	3.5"X12"		22 1/4"	34 1/4"			38
WTCL3514	3.5"X14"		24 1/4"	38 1/4"			41
WTCL3516	3.5"X16"		26 1/4"	42 1/4"			44
WTCL3518	3.5"X18"	1 3/4"	28 1/4"	46 1/4"	SAE#8	1"	47
WTCL3520	3.5"X20"		30 1/4"	50 1/4"			50
WTCL3524	3.5"X24"		34 1/4"	58 1/4"			553
WTCL3528	3.5"X28"		38 1/4"	66 1/4"			59
WTCL3530	3.5"X30"		40 1/4"	70 1/4"			65
WTCL3532	3.5"X32"		42 1/4"	74 1/4"			71
WTCL3534	3.5"X34"		44 1/4"	78 1/4"			75
WTCL3536	3.5"X36"		46 1/4"	82 1/4"			78
WTCL4004	4"X4"		14 1/4"	18 1/4"			35
WTCL4006	4"X6"		16 1/4"	22 1/4"			38
WTCL4008	4"X8"		18 1/4"	26 1/4"			42
WTCL4008-ASAE	4"X8"		20 1/4"	28 1/4"			43
WTCL4010	4"X10"		20 1/4"	30 1/4"			46
WTCL4012	4"X12"		22 1/4"	34 1/4"			49
WTCL4014	4"X14"	2"	24 1/4"	38 1/4"	SAE#8	1"	53
WTCL4016	4"X16"		26 1/4"	42 1/4"			57
WTCL4018	4"X18"		28 1/4"	46 1/4"			60
WTCL4020	4"X20"		30 1/4"	50 1/4"			64
WTCL4024	4"X24"		34 1/4"	58 1/4"			71
WTCL4028	4"X28"		38 1/4"	66 1/4"			79
WTCL4030	4"X30"		40 1/4"	70 1/4"			83
WTCL4032	4"X32"		42 1/4"	74 1/4"			86
WTCL4034	4"X34"		44 1/4"	78 1/4"			90
WTCL4036	4"X36"		46 1/4"	82 1/4"			94

WELDED HYDRAULIC CYLINDER – THROUGH HOLE



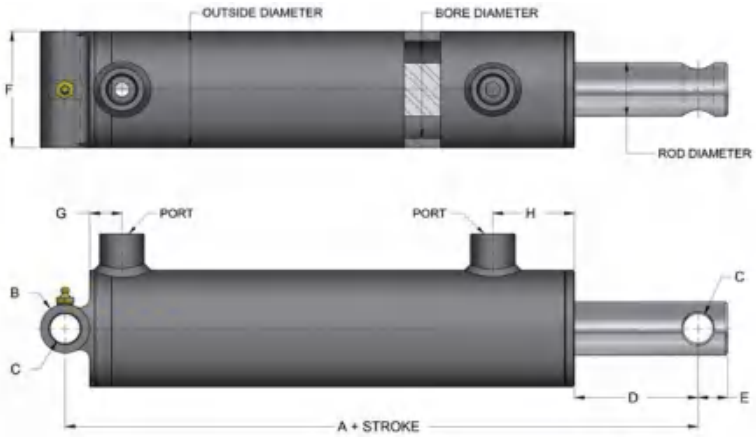

WELDED HYDRAULIC CYLINDER – THROUGH HOLE

PART NUMBER	CYLINDER BORE	OUTSIDE DIAMETER	ROD DIAMETER	A	B	C	D	E	F	G	H	PORT
WTH-15	1.50”	2.00”	1.00”	7.00”	1.25”	0.64”	2.43”	0.62”	2.00”	0.81”	1.87”	SAE 6
WTH-20	2.00”	2.50”	1.25”	8.00”	1.25”	0.76”	3.37”	0.75”	2.50”	0.81”	1.87”	SAE 8
WTH-25	2.50”	3.00”	1.37”	8.00”	1.25”	0.76”	3.12”	0.75”	3.00”	0.81”	2.06”	SAE 8
WTH-30	3.00”	3.50”	1.50”	8.00”	1.50”	1.01”	2.56”	1.00”	3.50”	0.81”	2.18”	SAE 8
WTH-35	3.50”	4.00”	1.75”	8.00”	1.50”	1.01”	2.43”	1.00”	4.00”	0.81”	2.18”	SAE 8
WTH-40	4.00”	4.50”	2.00”	9.00”	2.00”	1.26”	2.43”	1.25”	4.50”	0.81”	2.18”	SAE 8

SEAL TEMPERATURE RANGE: -30℃/+100℃ (-22℉/+212℉)
SEAL MAXIMUM SPEED: 3 FT/SEC
MAXIMUM RETRACTED WORKING PRESSURE 3000PSI
RETRACTED AND STROKE TOLERANCE ±1/8”

Through Hole

MODEL	BORE & STROKE	ROD DIAMETER	DIMENSIONS		PORTS	PIN SIZE	WEIGHT (LBS)
			RETRACTED	EXTENDED			
WTH1504	1.5"X4"	1"	11"	15"	SAE#6	5/8"	7
WTH1506	1.5"X6"		13"	19"			8
WTH1508	1.5"X8"		15"	23"			9
WTH1510	1.5"X10"		17"	27"			11
WTH1512	1.5"X12"		19"	31"			12
WTH1514	1.5"X14"		21"	35"			13
WTH1516	1.5"X16"		23"	39"			14
WTH2004	2"X4"	1 1/4"	12"	16"	SAE#8	3/4"	10
WTH2006	2"X6"		14"	20"			12
WTH2008	2"X8"		16"	24"			14
WTH2010	2"X10"		18"	28"			16
WTH2012	2"X12"		20"	32"			17
WTH2014	2"X14"		22"	36"			19
WTH2016	2"X16"		24"	40"			21
WTH2018	2"X18"		26"	44"			22
WTH2020	2"X20"		28"	48"			24
WTH2024	2"X24"		32"	56"			27

WELDED HYDRAULIC CYLINDER – THROUGH HOLE

Through Hole							
MODEL	BORE & STROKE	ROD DIAMETER	DIMENSIONS		PORTS	PIN SIZE	WEIGHT (LBS)
			RETRACTED	EXTENDED			
WTH2028	2"X28"	1 1/4"	36"	64"	SAE#8	3/4"	31
WTH2030	2"X30"		38"	68"			33
WTH2032	2"X32"		40"	72"			34
WTH2036	2"X36"		44"	80"			38
WTH2040	2"X40"		48"	88"			41
WTH2042	2"X42"		50"	92"			43
WTH2048	2"X48"		56"	104"			48
WTH2060	2"X60"		68"	128"			58
WTH2072	2"X72"		80"	152"			68
WTH2504	2.5"X4"	1 3/8"	12"	16"	SAE#8	3/4"	14
WTH2506	2.5"X6"		14"	20"			16
WTH2508	2.5"X8"		16"	24"			18
WTH2510	2.5"X10"		18"	28"			20
WTH2512	2.5"X12"		20"	32"			22
WTH2514	2.5"X14"		22"	36"			24
WTH2516	2.5"X16"		24"	40"			26
WTH2518	2.5"X18"		26"	44"			28
WTH2520	2.5"X20"		28"	48"			30
WTH2524	2.5"X24"		32"	56"			35
WTH2528	2.5"X28"		36"	64"			39
WTH2530	2.5"X30"		38"	68"			41
WTH2532	2.5"X32"		40"	72"			43
WTH2536	2.5"X36"		44"	80"			47
WTH2540	2.5"X40"		48"	88"			51
WTH3006	3"X6"	1 1/2"	14"	20"	SAE#8	1"	21
WTH3008	3"X8"		16"	24"			24
WTH3010	3"X10"		18"	28"			26
WTH3012	3"X12"		20"	32"			28
WTH3014	3"X14"		22"	36"			31
WTH3016	3"X16"		24"	40"			33
WTH3018	3"X18"		26"	44"			36
WTH3020	3"X20"		28"	48"			38
WTH3024	3"X24"		32"	56"			43
WTH3028	3"X28"		36"	64"			48
WTH3030	3"X30"		38"	68"			51
WTH3032	3"X32"		40"	72"			53
WTH3036	3"X36"		44"	80"			58
WTH3040	3"X40"		48"	88"			63
WTH3042	3"X42"		50"	92"			65
WTH3048	3"X48"		56"	104"			73
WTH3060	3"X60"		68"	128"			87

WELDED HYDRAULIC CYLINDER – THROUGH HOLE

Through Hole							
MODEL	BORE & STROKE	ROD DIAMETER	DIMENSIONS		PORTS	PIN SIZE	WEIGHT (LBS)
			RETRACTED	EXTENDED			
WTH3504	3.5"X4"	1 3/4"	12"	16"	SAE#8	1"	24
WTH3506	3.5"X6"		14"	20"			27
WTH3508	3.5"X8"		16"	24"			30
WTH3510	3.5"X10"		18"	28"			33
WTH3512	3.5"X12"		20"	32"			36
WTH3514	3.5"X14"		22"	36"			39
WTH3516	3.5"X16"		24"	40"			42
WTH3518	3.5"X18"		26"	44"			45
WTH3520	3.5"X20"		28"	48"			48
WTH3524	3.5"X24"		32"	56"			54
WTH3528	3.5"X28"		36"	64"			60
WTH3530	3.5"X30"		38"	68"			63
WTH3532	3.5"X32"		40"	72"			66
WTH3536	3.5"X36"		44"	80"			72
WTH3540	3.5"X40"		48"	88"			79
WTH3542	3.5"X42"		50"	92"			82
WTH3548	3.5"X48"		56"	104"			91
WTH4014	4"X14"	2"	23"	37"	SAE#8	1 1/4"	51
WTH4016	4"X16"		25"	41"			55
WTH4018	4"X18"		27"	45"			58
WTH4020	4"X20"		29"	49"			62
WTH4024	4"X24"		33"	57"			70
WTH4028	4"X28"		37"	65"			77
WTH4030	4"X30"		39"	69"			81
WTH4032	4"X32"		41"	73"			84
WTH4036	4"X36"		45"	81"			92
WTH4040	4"X40"		49"	89"			99
WTH4042	4"X42"		51"	93"			103
WTH4048	4"X48"		57"	105"			114
WTH4060	4"X60"		69"	129"			136

INVERTED TELESCOPIC CYLINDER

WEITAI HYDRAULIC CYLINDER

Features:

- High Quality Steel Tube For Heavy Duty Construction.
- Single Acting Cylinder For Widely Applications.
- Perfect For Dump Trailer Beds.
- 3000PSI Rated Pressure.
- Top Brand Quality Sealing System.
- 100% Tested Under 1.5 Times Pressure.
- Manufactured To ISO9000-2001 Standards
- Other Assembling Types Are Optional.



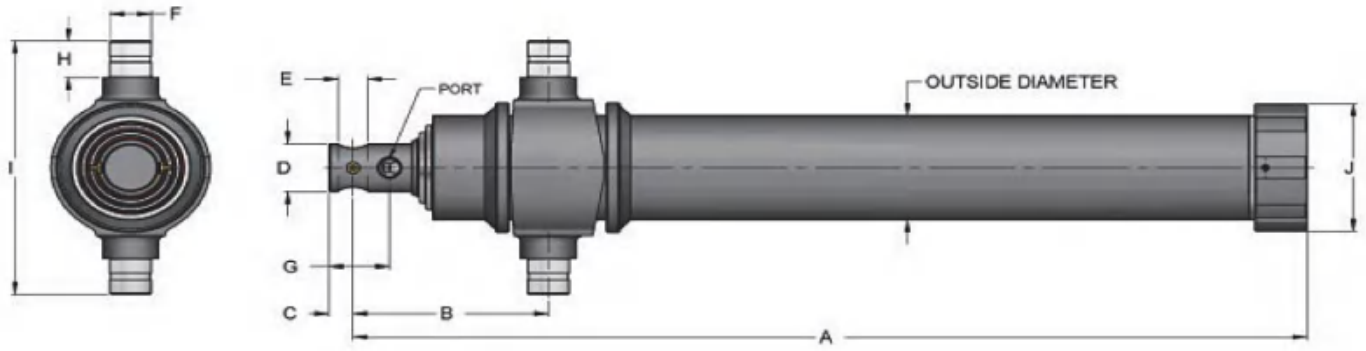

7 TONS-INVERTED TELESCOPIC CYLINDER															
PART NUMBER	CAPACITY	STROKE	OUTSIDE DIAMETER	A	B	C	D	E	F	G	H	I	J	PORT	WEIGHT (LBS)
WTC07833	7 TONS	78”	3.75”	34.62”	7.00”	0.87”	2.00”	1.06”	1.25”	2.25”	1.25”	9.00”	4.25”	1/2 NPT	86
WTC09033		90”	3.75”	38.62”											94
WTC10833		108”	3.75”	44.62”											106

RETRACTED TOLERANCE ± 1/8"

12 TONS-INVERTED TELESCOPIC CYLINDER															
PART NUMBER	CAPACITY	STROKE	OUTSIDE DIAMETER	A	B	C	D	E	F	G	H	I	J	PORT	WEIGHT (LBS)
WTC07843	12 TONS	78”	4.50”	33.87”	7.00”	0.87”	2.00”	1.06”	1.50”	2.25”	1.50”	10.50”	5.00”	1/2 NPT	99
WTC09043		90”	4.50”	37.87”											109
WTC10843		108”	4.50”	43.87”											125
WTC12043		120”	4.50”	47.87”											135

RETRACTED TOLERANCE ± 1/8"

CUSOMIZED HYDRAULIC CYLINDER

WEITAI
HYDRAULIC CYLINDER

YOUR STRATEGIC OEM PARTNER FOR PRECISION HYDRAULICS

From heavy-duty construction to precision agriculture, WEITAI custom hydraulic cylinders power the world's most demanding machinery. We go beyond manufacturing; we deliver integrated engineering solutions designed to maximize machine reliability, safety, and operational uptime.

INDUSTRY APPLICATIONS:



Construction & Earthmoving:

Skid steer loaders, excavators, and loader cranes.

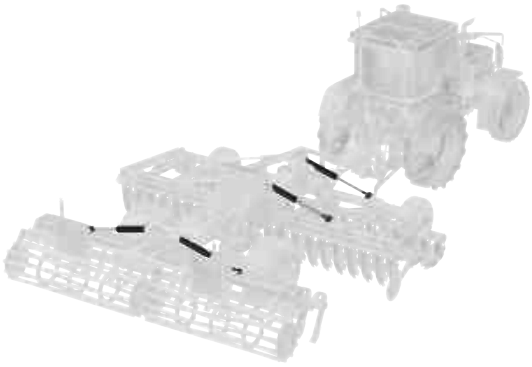

Agricultural & Forestry:

Built for harvesters, tractors, and processing equipment.

Specialty & Offshore:

Mining, maritime applications.



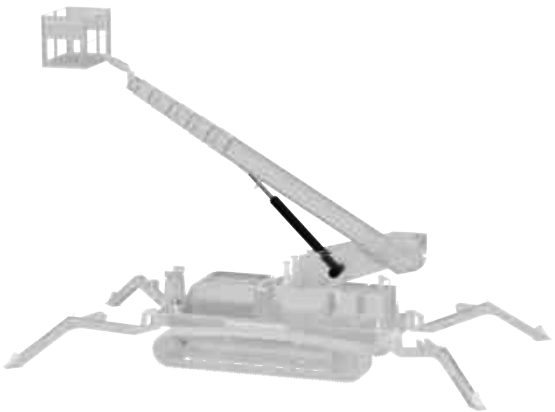

Municipal & Utility:

Refuse collectors, street sweepers, and aerial platforms.

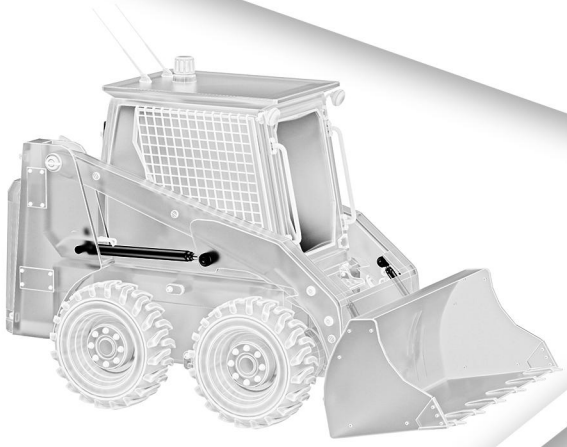

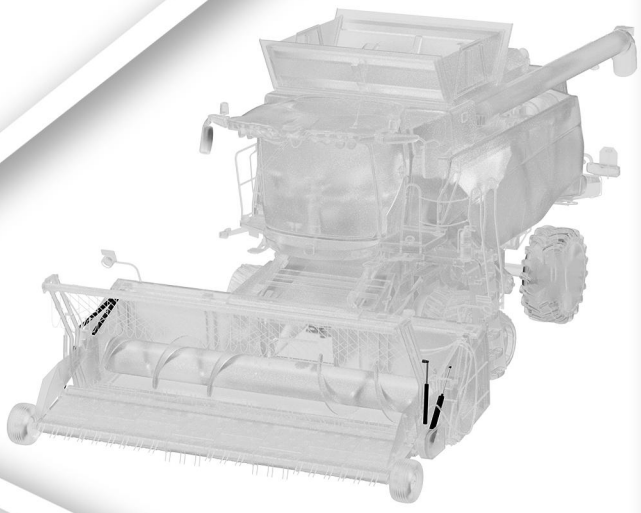

QINGDAO WEITAI HYDRAULIC CO., LTD

TEL: +86 532 6872 1310

EMAIL: sales@weitai-group.com

WEB: www.wthydraulic.com



