HYDRAULIC
ROTARY ACTUATORS

Qingdao Weitai Hydraulic Co., Ltd.



WEITAI

ROTARY ACTUATOR

WEITAI
ROTARY ACTUATOR

WEITAI HYDRAULIC ROTARY ACTUATORS

The rotary actuators offer simple and cost-effective solutions to move, support and position rotating loads in countless applications. The actuators are designed to replace multiple components and function as a rotating device, mounting bracket and bearing, all-in-one. They feature tremendous torque output and exceptional load bearing capability in compact dimensions.



FEATURES

WEITAI
ROTARY ACTUATOR

POWERFUL

- High Torque
- High Bearing Capacity

COMPACT

- High Power Density
- Fit In Tight Spaces



HOLD POSITION

- Zero Internal Leakages
- Smooth Operation
- No External Break Required

SIMPLIFIES

- Eliminates Bearing
- Linkages & Brackets
- Reduces Bill of Materials
- Simplifies Supply Chain
- Assembly & Maintenance

BACK DRIVES IN OVERLOAD CONDITIONS

- Hydraulic Fuse
- Prevents Mechanical Damage

DURABLE

- Suitable for Harsh Environments
- Moving Parts Enclosed

MOUNTING OPTIONS

WEITAI ROTARY ACTUATOR

CANTILEVER MOUNT

The load works on one side flange of actuator only. This type in not recommended for aerial work platforms or other critical and safety-related applications.

STRADDLE MOUNT

The load is supported by flanges from both sides.

OTHERS

Rail mount, Clevis mount or any customized mount.

CANTILEVER MOUNT

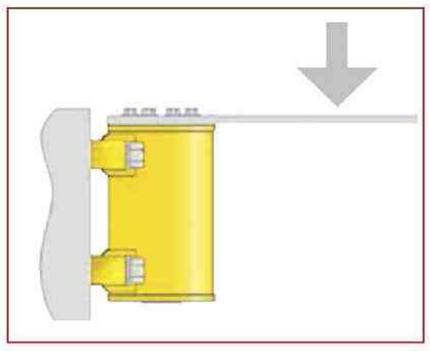

STRADDLE MOUNT

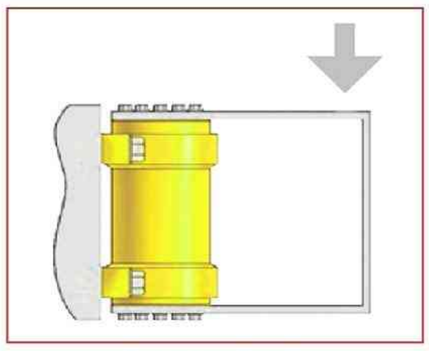

RAIL MOUNT

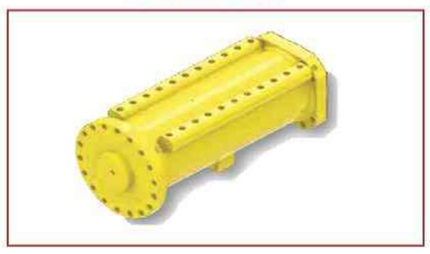

CLEVIS MOUNT



COUNTERBALANCE VALVE-OPTIONAL

The counterbalance valve protects rotation in the event of a hydraulic line failure and protect the actuator against excessive torque loading.

WL10, WL20 AND WL40 SERIES: Pressure 228 bar, pilot ratio 3:1

WL30 SERIES: Pressure 250 bar, pilot ratio 3:1

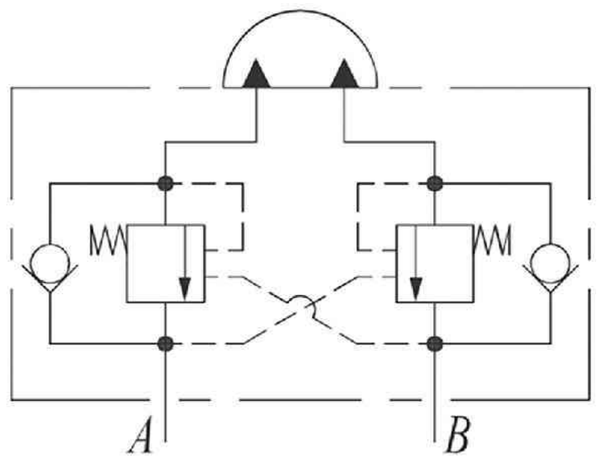

PERFORMANCE

The driving torque and holding torque are approximately linear with hydraulic pressure. As moment loads increase, drive torque may be reduced by up to 15%.

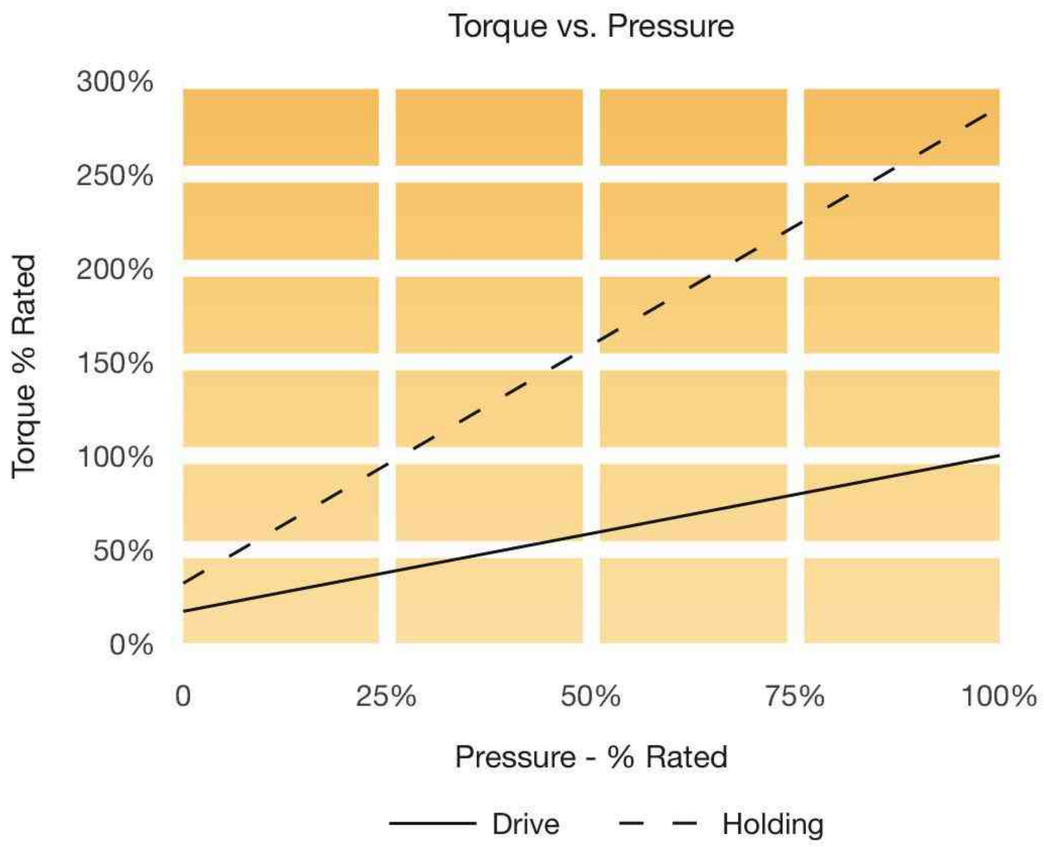

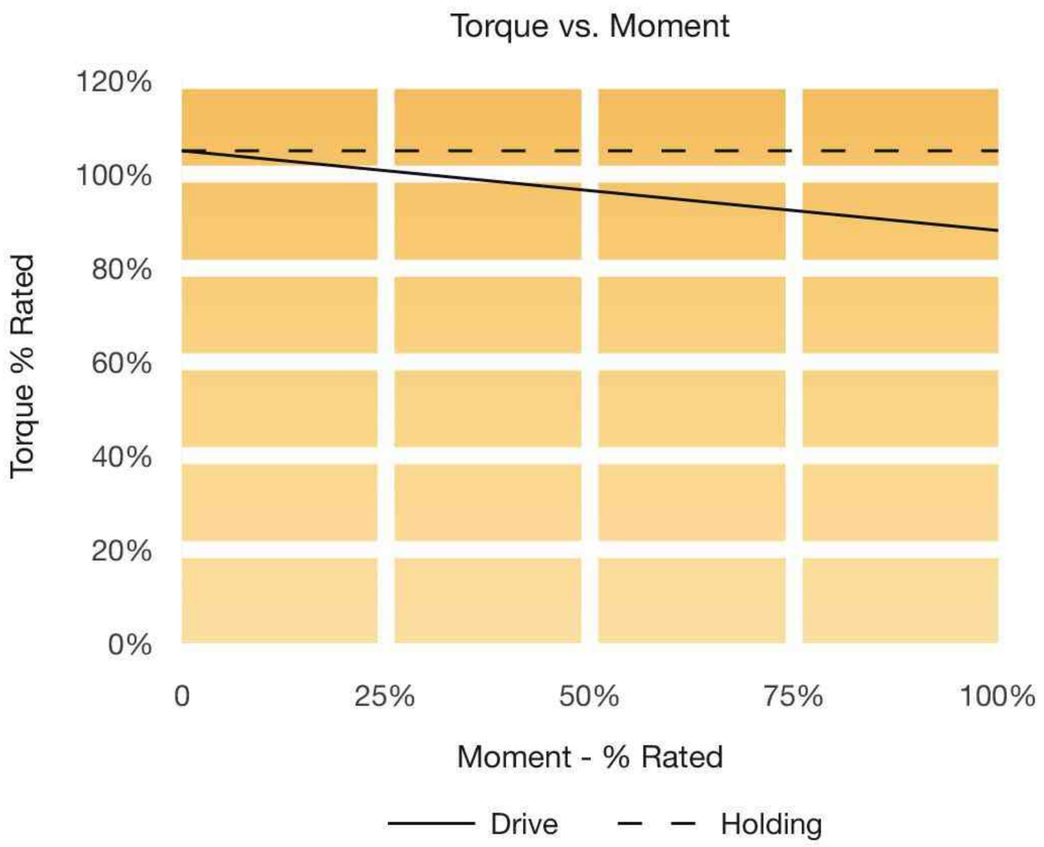

OPERATING INFORMATION

WEITAI
ROTARY ACTUATOR

WL10 SERIES

ROTATION	180°, 360°
MAX. DRIVE TORQUE	180-2700NM
MAX. HOLDING TORQUE	630-9400NM
MAX. STRADDLE MOMENT	560-11200NM
MOUNTING	Flange





WL20 SERIES

ROTATION	180°
MAX. DRIVE TORQUE	500-4200NM
MAX. HOLDING TORQUE	1300-10500NM
MAX. STRADDLE MOMENT	2500-31600NM
MAX. CANTILEVER MOMENT	1360-15800NM
MOUNTING	Foot

WL30 SERIES

ROTATION	180°, 360°
MAX. DRIVE TORQUE	1900-43000NM
MAX. HOLDING TORQUE	4900-110000NM
MAX. STRADDLE MOMENT	19200-170000NM
MAX. CANTILEVER MOMENT	5200-64400NM
MOUNTING	Foot, Flange



OPERATING INFORMATION

WEITAI
ROTARY ACTUATOR

WL40 SERIES

ROTATION	200°, 220°
MAX. DRIVE TORQUE	2800-6700NM
MAX. HOLDING TORQUE	6100-14300NM
MAX. STRADDLE MOMENT	4200-10100NM
MOUNTING	Foot



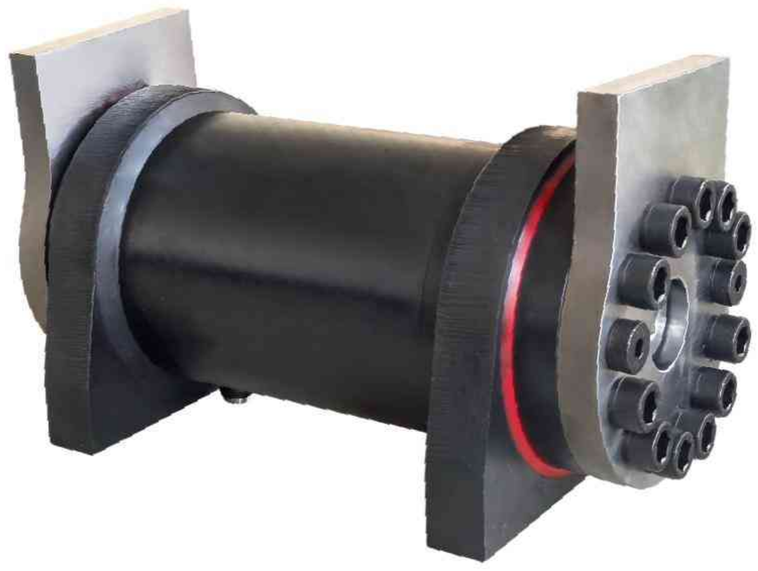

TILT ACTUATOR

EXCAVATOR WEIGHT	1.5T-50T
ROTATION	90°-180°
SERIES	WP, WT, WBV

More Customized Models

Contact WEITAI for special requirements









MODEL CODE

WEITAI
ROTARY ACTUATOR

WL10	SERIES	WL10 WL20 WL30 WL40
003	MODEL(TORQUE/100)	WL10: 002, 003, 006, 010, 016, 027 WL20: 005, 009, 016, 027, 042 WL30: 019, 028, 047, 073, 105, 140, 180, 240 WL40: 028, 050,067
360	ROTATION	WL10: 180°, 360° WL10-002: 180° only WL20: 180° WL30: 180°, 360° WL40: 200°, 220°
Q	OUTPUT MODE	WL10: Q- Front Flange WL20: Q- Front Flange | S-Double Flanges WL30: Q-Front Flange | S-Double Flanges WL40: Z-Shaft Output | H- Spline
H	MOUNTING OPTIONS	WL10: H- Rear Flange WL20: D- Foot WL30: D- Foot | H- Rear Flange | Q-Front Flange WL40: D- Foot
Y	VALVE OPTIONS	Y: Counterbalance Valve W: No Valve
J	SEALS	J: Standard D: Low Temp G: High Temp
E	MEASUREMENT SYSTEM	E: Imperial M: Metric D: Customized

The model codes information is for your ordering reference only. The model codes defines standard configurations of WEITAI rotary actuators. For special requirements, please contact us.

SPECIFICATIONS OF WL10 SERIES

WEITAI
ROTARY ACTUATOR

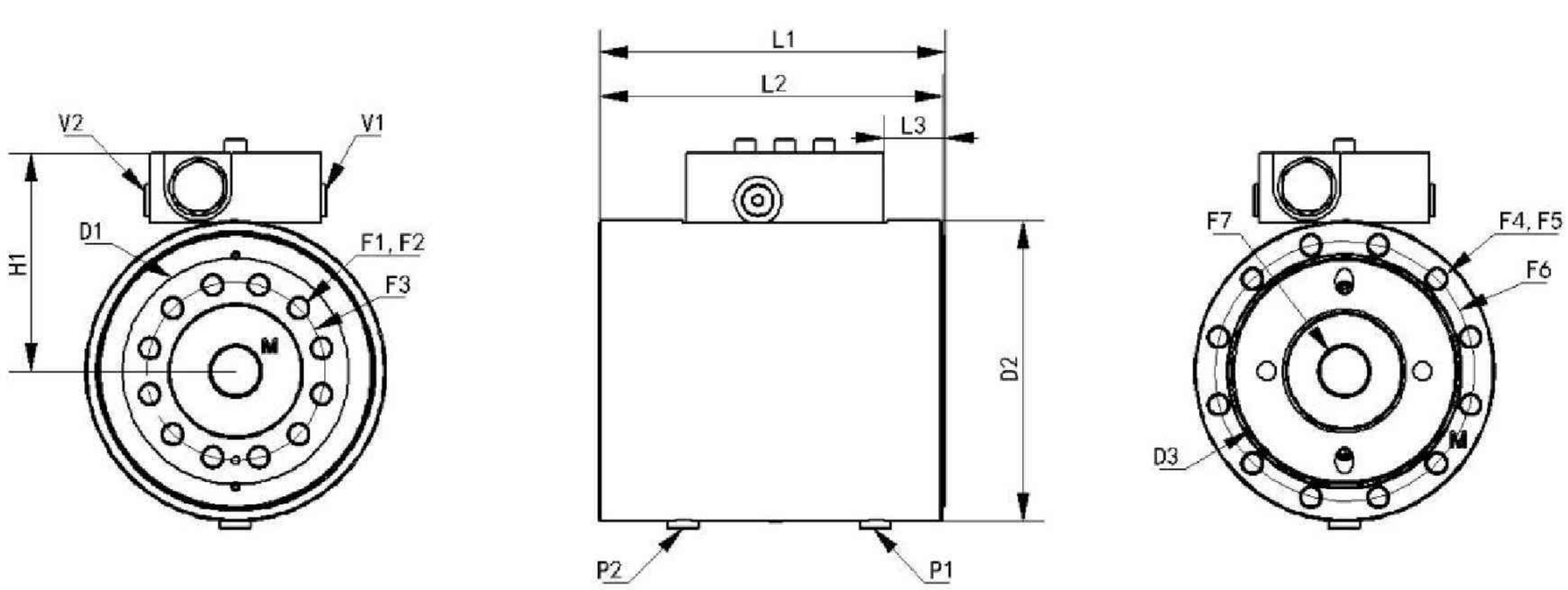

Shaft Flange

Housing Flange

TECHNICAL PARAMETERS

MODEL	WL10-002	WL10-003	WL10-006	WL10-010	WL10-016	WL10-027
DRIVE TORQUE NM@21MPA	180	320	600	1000	1600	2700
HOLDING TORQUE NM@21MPA	630	1200	1900	3800	5700	9400
MAX CANTILEVER MOMENT CAPACITY NM	560	1000	2200	5600	9000	11200
RADIAL CAPACITY KG	900	1350	1850	3600	4980	6700
AXIAL CAPACITY KG	900	1350	1850	3600	4980	6700
DISPLACEMENT 180° CC	63.9	121	192	365	552	914
DISPLACEMENT 360° CC	-	243	384	733	1105	1829
WEIGHT 180° KG	6.4	10	14.2	26	43.3	57
WEIGHT 360° KG	-	12.8	19.2	35	54.5	83

MOUNTING DIMENSIONS

MODEL	D1 MOUNTING FLANGE DIA MM	D2 HOUSING DIA MM	F1 MOUNTING HOLE MM	F2 QTY OF MOUNTING HOLES	F3 BOLT CIRCLE DIA OF SHAFT FLANGE MM	F4 MOUNTING HOLE MM	F5 QTY OF MOUNTING HOLES	F6 BOLT CIRCLE DIA OF ENDCAP FLANGE MM	F7 SHAFT THROUGH HOLE DIA MM
WL10-002	77.2	100	M8X1.25	8	54	M8X1.25	8	86	14.3
WL10-003	89	119	M8X1.25	8	73	M8X1.25	8	103	17
WL10-006	102	135	M10X1.5	12	80	M10X1.5	12	117	21.4
WL10-010	127	170	M12X1.75	12	102	M12X1.75	12	151	35.7
WL10-016	148	198	M12X1.75	12	127	M12X1.75	12	175	45.7
WL10-027	185	226	M16X2	12	140	M12X1.75	12	203	66.7

MODEL	H1 HEIGHT MM	L1 LENGTH 180° MM	L1 LENGTH 360° MM	L2 LENGTH 180° MM	L2 LENGTH 360° MM	L3 DISTANCE TO VALVE 360° MM	L3 DISTANCE TO VALVE 180° MM
WL10-002	80	140	-	138	-	25.4	-
WL10-003	90	143	189	142	188	26.9	22.6
WL10-006	98	156	212	154	211	27.7	24.6
WL10-010	115	184	258	182	256	27.9	42.7
WL10-016	129	224	311	221	308	38.6	60.2
WL10-027	143	241	346	239	344	43.9	70.4

MODEL	P1, P2 PORT	V1, V2 PORT
WL10-002 WL10-003 WL10-006 WL10-010 WL10-016 WL10-027	ISO-1179-1/BSPP 'G' series, size 1/8 ~1/4. See drawing for details.	ISO-11926/SAE series, size 7/16. See drawing for details.

*Specification charts are for general reference only, please consult drawing for actual values and tolerances.

SPECIFICATIONS OF WL20 SERIES

WEITAI
ROTARY ACTUATOR

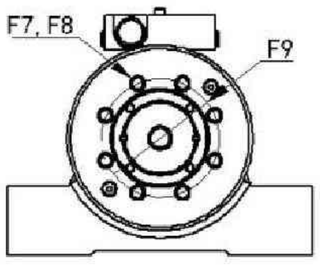

27.42 End Cap

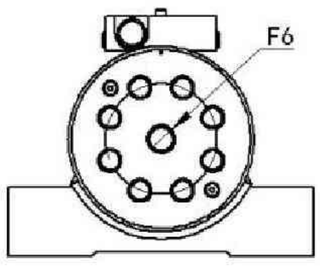

27.42 Shaft Flange

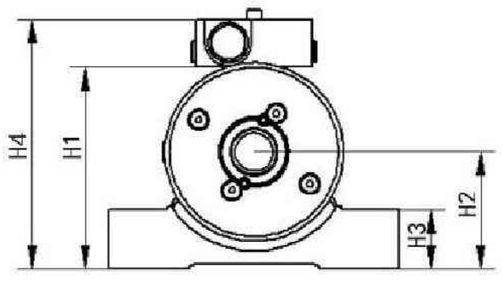

5, 9, 16 End Cap

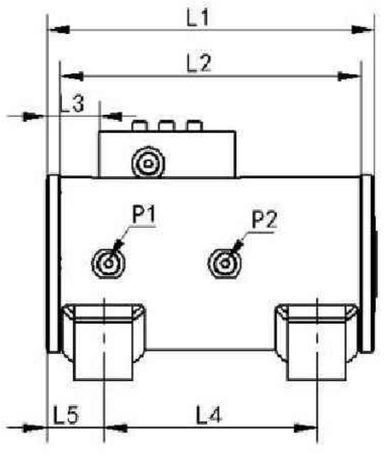

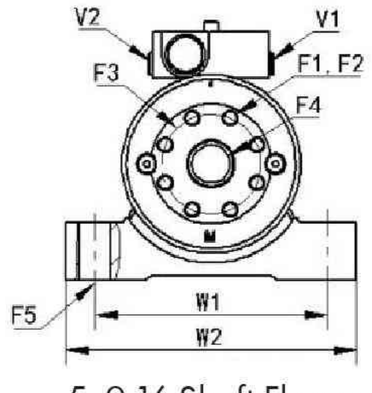

5, 9, 16 Shaft Flange

TECHNICAL PARAMETERS

MODEL	WL20-005	WL20-009	WL20-016	WL20-027	WL20-042
DRIVE TORQUE NM@21MPA	500	900	1600	2680	4200
HOLDING TORQUE NM@21MPA	1300	2400	4400	7100	10500
MAX STRADDLE MOMENT CAPACITY NM	2500	4500	10200	16400	31600
MAX CANTILEVER MOMENT CAPACITY NM	1360	2480	5420	11300	15800
RADIAL CAPACITY KG	1380	2130	4190	5580	9530
AXIAL CAPACITY KG	500	680	1000	1400	1770
DISPLACEMENT 180° CC	132	234	436	726	1070
WEIGHT 180° KG	12.5	17	30	51	77

MOUNTING DIMENSIONS

MODEL	D1 MOUNTING FLANGE DIA MM	D2 HOUSING DIA MM	F1 MOUNTING HOLE OF SHAFT FLANGE MM	F2 QTY OF SHAFT FLANGE MOUNTING HOLES	F3 BOLT CIRCLE DIA OF SHAFT FLANGE MM	F4 CLEARNACE HOLE FOR SHAFT THROUGH BOLT DIA MM	F5 MOUNTING HOLES OF HOUSING FOOT	F6 SHAFT CENTER HOLE MM	F7 MOUNTING HOLE OF ENDCAP FLANGE MM	F8 QTY OF ENDCAP FLANGE MOUNTING HOLE
WL20-005	104	101	M10X1.5	6	53.9	M20	M16	-	-	-
WL20-009	117	114	M10X1.5	8	65	M24	M20	-	-	-
WL20-016	142	139	M12X1.75	8	85	M24	M24	-	-	-
WL20-027	170	165	M20X2.5	8	102	-	M24	M24x3	M12x1.75	8
WL20-042	196	191	M20X2.5	10	121	-	M30	1-1/4-7	M16x2	10

MODEL	F9 BOLT CIRCLE DIAMTER OF ENDCAP FLANGE	H1 HEIGHT WITHOUT COUNTER BALANCE VALVE MM	H2 HEIGHT TO CENTERLINE MM	H3 FOOT HEIGHT MM	H4 OVERALL HEIGHT MM	L1 OVERALL LENGTH MM	L2 LENGTH WITHOUT ROTATING FLANGEMM	L3 SHAFT FLANGE TO COUNTER-BALANCE VALVE MM	L4 MOUNTING LENGTH MM	L5 SHAFT FLANGE TO MOUNTING HOLE MM
WL20-005	-	119	66	34.3	146	188	173	32	111	37.9
WL20-009	-	135	76.2	38.1	163	216	197	34.5	140	37.6
WL20-016	-	158	85.9	44.5	185	248	229	44.7	152	47
WL20-027	108	193	108	63.5	220	298	276	48.8	184	57.2
WL20-042	121	218	121	70	245	337	314	49	216	60.5

MODEL	W1 MOUNTING WIDTH MM	W2 OVERALL WIDTH MM	P1, P2 PORT	V1, V2 PORT
WL20-005	145	178	IS0-1179-1/BSPP 'G' series, size 1/8-1/4. See drawing for details.	IS0-11926/SAE series, size 7/16. See drawing for details.
WL20-009	152	191		
WL20-016	197	248		
WL20-027	222	279		
WL20-042	267	330		

*Specification charts are for general reference only, please consult drawing for actual values and tolerances.

SPECIFICATIONS OF WL30 SERIES
(FOOT MOUNT)

WEITAI
ROTARY ACTUATOR

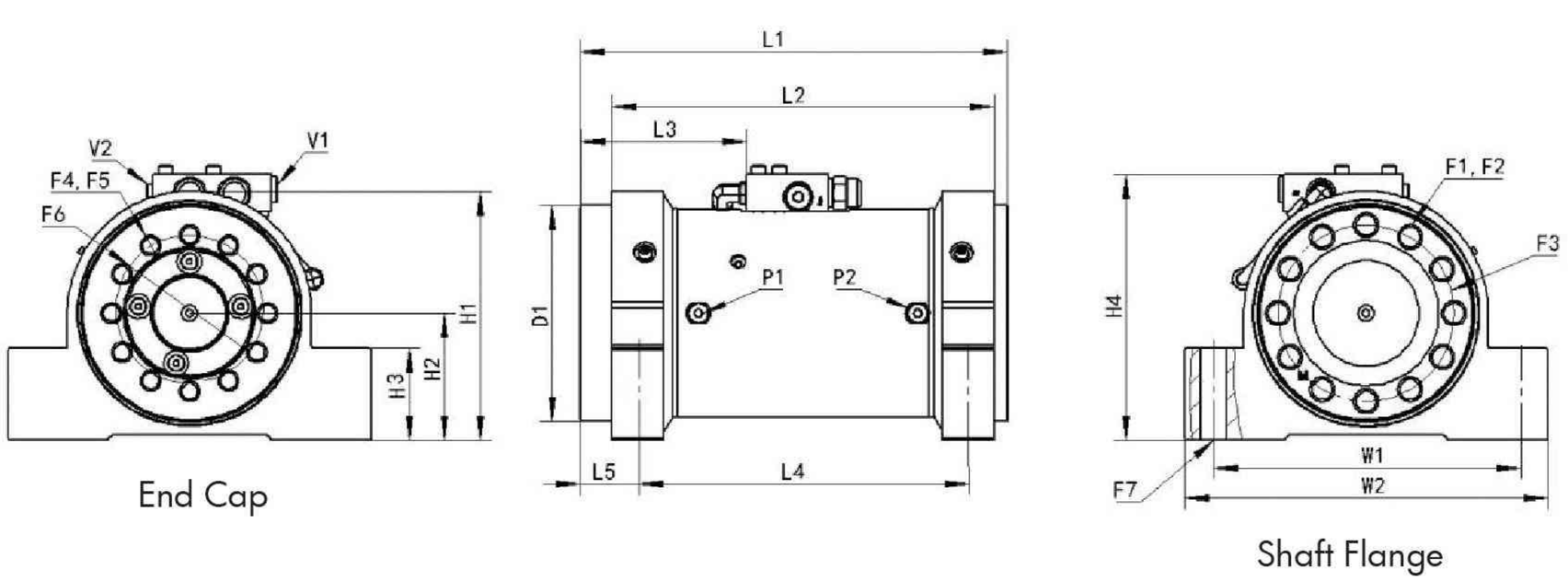

TECHNICAL PARAMETERS

MODEL	WL30-019	WL30-028	WL30-047	WL30-073	WL30-105	WL30-140	WL30-180	WL30-240
DRIVE TORQUE NM@21MPA	1900	2800	4700	7300	10500	14000	18000	24000
HOLDING TORQUE NM@21MPA	4900	6800	12000	18000	26000	35000	46000	59000
MAX CANTILEVER MOMENT CAPACITY NM	5200	7100	11900	18400	29500	38800	55900	72900
MAX STRADDLE MOMENT CAPACITY 180° NM	13400	16900	30800	47800	75100	98900	130500	170000
MAX STRADDLE MOMENT CAPACITY 360° NM	19200	24600	45400	71200	111500	146000	197700	256500
RADIAL CAPACITY KG	1800	2300	3600	5000	6800	8200	10000	11800
AXIAL CAPACITY KG	1400	1800	2700	3600	4500	5900	6800	8200
DISPLACEMENT 180° CC	492	688	1180	1870	2680	3540	4650	6000
DISPLACEMENT 360° CC	980	1390	2360	3740	5360	7080	9320	12000
WEIGHT 180° KG	34.5	50	72.5	110	160	220	280	360
WEIGHT 360° KG	45.5	63.4	100	140	200	290	370	455

MOUNTING DIMENSIONS

MODEL	D1 MOUNTING FLANGE DIA MM	D2 HOUSING DIA MM	F1 MOUNTING HOLE OF SHAFT FLANGE MM	F2 QTY OF SHAFT FLANGE MOUNTING HOLE	F3 BOLT CIRCLE DIA OF SHAFT FLANGE MM	F4 MOUNTING HOLE OF ENDCAP FLANGE MM	F5 QTY OF ENDCAP FLANGE MOUNTING HOLE	F6 BOLT CIRCLE OF DIAMETER OF ENDCAP FLANGE	F7 MOUNTING HOLES OF HOUSING FOOT
WL30-019	139	140	M12x1.75	12	115	M10x1.5	12	108	M16
WL30-028	155	152	M16x2	12	125	M12x1.75	12	120	M20
WL30-047	183	178	M20x2.5	12	150	M16x2	12	133	M22
WL30-073	209	203	M22x2.5	12	170	M20x2.5	12	150	M24
WL30-105	234	229	M24x3	12	195	M22x2.5	12	170	M27
WL30-140	263	254	M27x3	12	215	M24x3	12	190	M30
WL30-180	288	279	M27x3	12	240	M27x3	12	210	M36
WL30-240	310	305	M30x3.5	12	255	M27x3	12	230	M36

MODEL	H1 HEIGHT WITHOUT COUNTER-BALANCE VALVE MM	H2 HEIGHT TO CENTERLINE MM	H3 FOOT HEIGHT MM	H4 OVERALL HEIGHT MM	L1 OVERALL LENGTH 180° MM	L1 OVERALL LENGTH 360° MM	L2 LENGTH WITHOUT ROTATING FLANGE 180° MM	L2 LENGTH WITHOUT ROTATING FLANGE 360° MM
WL30-019	156	80	48	179	298	427	261	392
WL30-028	186	94.9	70	201	323	470	286	433
WL30-047	212	108	78	226	365	538	323	496
WL30-073	240	122	88	271	413	615	363	565
WL30-105	276	140	105	283	475	705	431	661
WL30-140	305	154	110	310	524	776	463	715
WL30-180	327	165	120	334	551	836	493	775
WL30-240	362	184	135	366	600	906	534	843

MOUNTING DIMENSIONS

MODEL	L3 SHAFT FLANGE TO COUNTERBALANCE VALVE 180° MM	L3 SHAFT FLANGE TO COUNTERBALANCE VALVE 360° MM	L4 MOUNTING LENGTH 180° MM	L4 MOUNTING LENGTH 360° MM	L5 SHAFT FLANGE TO MOUNTING HOLE MM
WL30-019	75.2	149	229	358	38.1
WL30-028	134	157	248	395	43.9
WL30-047	143	197	281	454	50
WL30-073	130	232	314	516	56.9
WL30-105	152	267	374	604	59.9
WL30-140	185	308	400	652	74.2
WL30-180	196	338	426	708	75.9
WL30-240	221	374	460	766	80

MODEL	W1 MOUNTING WIDTH MM	W2 OVERALL WIDTH MM	P1, P2 PORT	V1, V2 PORT
WL30-019	190	222	IS0-1179-1/BSPP 'G' series, size 1/8-1/4. See drawing for details.	IS0-11926/SAE series, size 7/16. See drawing for details.
WL30-028	230	268		
WL30-047	260	310		
WL30-073	300	350		
WL30-105	340	400		
WL30-140	380	447		
WL30-180	410	484		
WL30-240	450	530		

*Specification charts are for general reference only, please consult drawing for actual values and tolerances.

SPECIFICATIONS OF WL30 SERIES
(FLANGE MOUNT)

WEITAI
ROTARY ACTUATOR

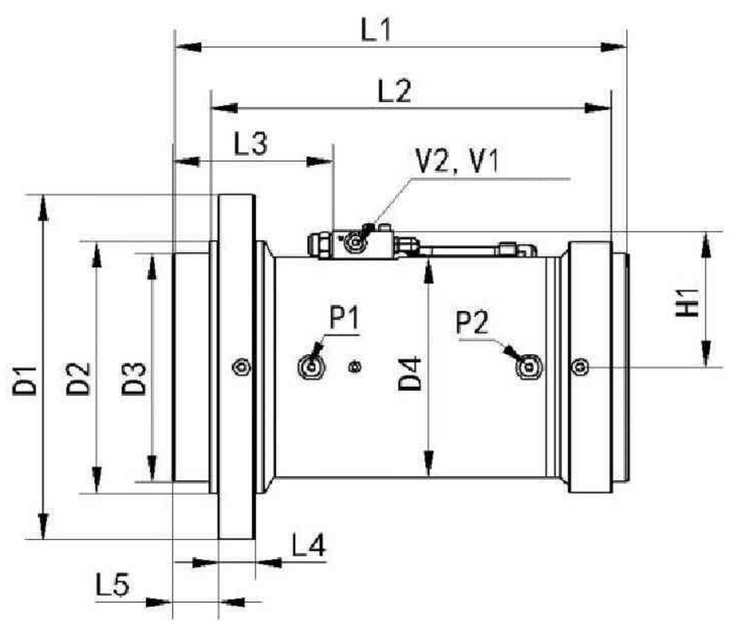

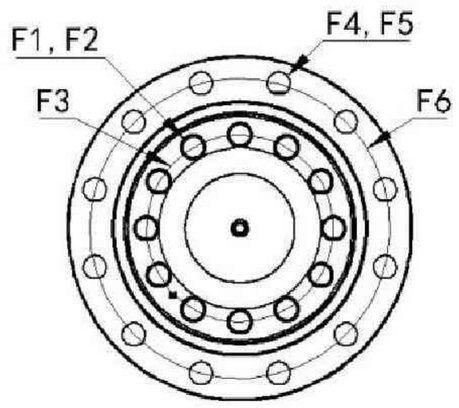

Shaft Flange

TECHNICAL PARAMETERS

MODEL	WL30-019	WL30-028	WL30-047	WL30-073	WL30-105	WL30-140	WL30-180	WL30-240
DRIVE TORQUE NM@21MPA	1900	2800	4700	7300	10500	14000	18000	24000
HOLDING TORQUE NM@21MPA	4900	6800	12000	18000	26000	35000	46000	59000
MAX CANTILEVER MOMENT CAPACITY NM	5200	7100	11900	18400	29500	38800	55900	72900
MAX STRADDLE MOMENT CAPACITY 180° NM	13400	16900	30800	47800	75100	98900	130500	170000
MAX STRADDLE MOMENT CAPACITY 360° NM	19200	24600	45400	71200	111500	146000	197700	256500
RADIAL CAPACITY KG	1800	2300	3600	5000	6800	8200	10000	11800
AXIAL CAPACITY KG	1400	1800	2700	3600	4500	5900	6800	8200
DISPLACEMENT 180° CC	492	688	1180	1870	2680	3540	4650	6000
DISPLACEMENT 360° CC	980	1390	2360	3740	5360	7080	9320	12000
WEIGHT 180° KG	34.5	50	72.5	110	160	220	280	360
WEIGHT 360° KG	45.5	63.4	100	140	200	290	370	455

MOUNTING DIMENSIONS

MODEL	D1 MOUNTING FLANGE DIA MM	D2 PILOT DIA MM	D3 SHAFT AND ENDCAP FLANGE DIA MM	D4 HOUSING DIA MM	F1 MOUNTING HOLE OF SHAFT FLANGE MM	F2 QTY OF SHAFT FLANGE MOUNTING HOLES	F3 BOLT CIRCLE DIA OF SHAFT FLANGE	F4 MOUNTING HOLE OF ENDCAP FLANGE MM	F5 QTY OF ENDCAP FLANGE MOUNTING HOLE
WL30-019	200	150	139	140	M12x1.75	12	115	M10x1.5	12
WL30-028	235	175	155	152	M16x2	12	125	M12x1.75	12
WL30-047	280	205	183	178	M20x2.5	12	150	M16x2	12
WL30-073	315	230	209	203	M22x2.5	12	170	M20x2.5	12
WL30-105	355	260	234	229	M24x3	12	195	M22x2.5	12
WL30-140	396	290	263	254	M27x3	12	215	M24x3	12
WL30-180	442	315	288	279	M27x3	12	240	M27x3	12
WL30-240	475	340	310	305	M30x3.5	12	255	M27x3	12

MODEL	F6 BOLT CIRCLE DIAMETER OF ENDCAP FLANGE	H1 CENTERLINE TO VALVE TOP MM	L1 OVERALL LENGTH 180° MM	L1 OVERALL LENGTH 360° MM	L2 LENGTH WITHOUT ROTATING FLANGE 180° MM	L2 LENGTH WITHOUT ROTATING FLANGE 360° MM	L3 SHAFT FLANGE TO COUNTER-BALANCE VALVE 180° MM	L3 SHAFT FLANGE TO COUNTER-BALANCE VALVE 360° MM	L4 MOUNTING FLANGE THICKNESS MM	L5 SHAFT FLANGE TO MOUNTING FLANGE FACE MM
WL30-019	175	99.1	298	427	261	392	75.2	149	25.2	27
WL30-028	206	106	323	470	286	433	134	157	26	32
WL30-047	245	118	365	538	323	496	143	197	31	35
WL30-073	275	131	413	615	363	565	130	232	33	42
WL30-105	310	144	475	705	431	661	152	267	40	40
WL30-140	345	156	524	776	463	715	185	308	42	53
WL30-180	380	169	551	836	493	775	196	338	46	54
WL30-240	410	182	600	906	534	843	221	374	52	56

P1, P2 PORT	IS0-1179-1/BSPP 'G' series, size 1/8-1/4. See drawing for details.
V1, V2 PORT	IS0-11926/SAE series, size 7/16. See drawing for details.

*Specification charts are for general reference only, please consult drawing for actual values and tolerances.

SPECIFICATIONS OF WL40 SERIES

WEITAI
ROTARY ACTUATOR

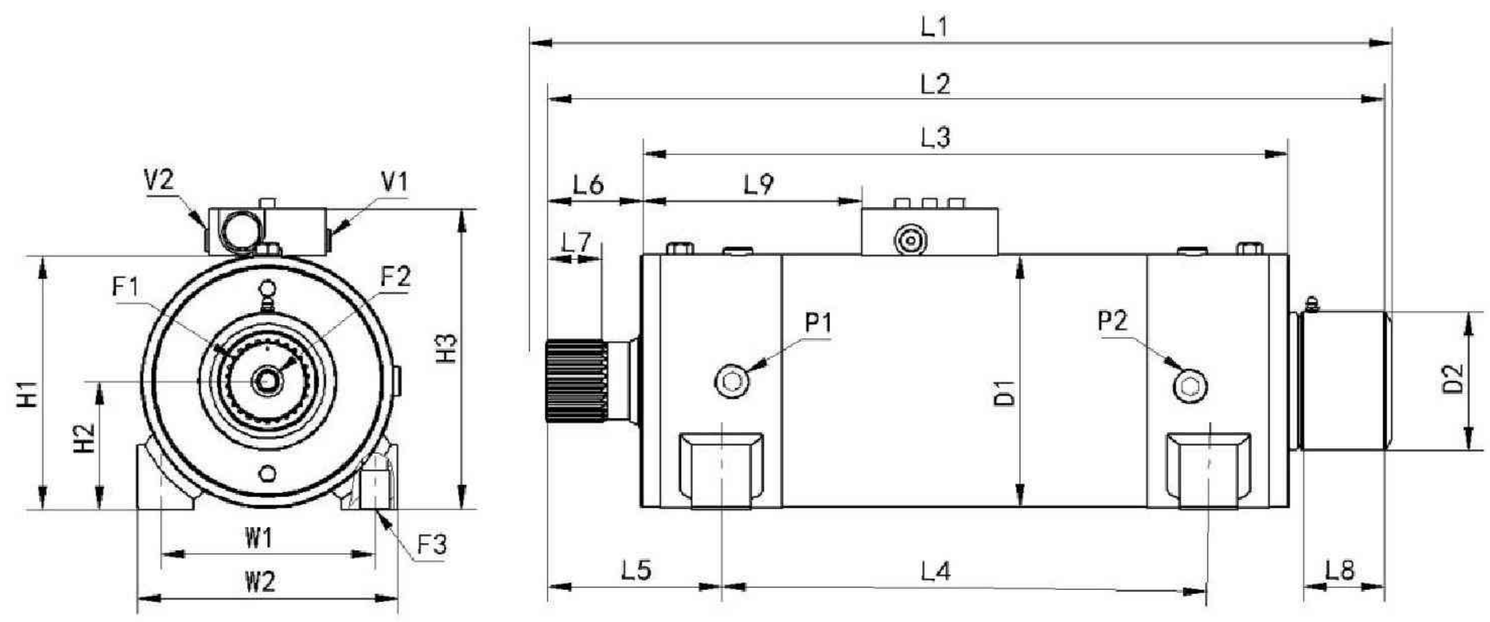

TECHNICAL PARAMETERS

MODEL	WL40-028	WL40-050	WL40-067
DRIVE TORQUE NM@21MPA	2800	5000	6700
HOLDING TORQUE NM@21MPA	6100	10600	14300
STANDARD ROTATION	220°	220°	200°
MAX STRADDLE MOMENT CAPACITY NM	4200	7600	10100
RADIAL CAPACITY KG	2040	3130	3900
AXIAL CAPACITY KG	2040	3130	3900
DISPLACEMENT 180° CC	775	1360	1650
WEIGHT KG	33.6	58	75

MOUNTING DIMENSIONS

MODEL	D1 HOUSING DIA MM	D2 OPTIONAL SPLINE ADAPTER DIA MM	F1 SHAFT SPLINE MM	F2 SHAFT SPLINE MOUNTING HOLE MM	F3 FOOT MOUNTING HOLE MM	H1 HEIGHT WITHOUT COUNTER-BALANCE VALVE MM	H2 HEIGHT TO CENTERLINE MM	H3 OVERALL HEIGHT MM
WL40-028	140	80	See drawing for details	M12x1.75	M16x2	150	73.2	173
WL40-050	165	89.9		M12x1.75	M20x2.5	176	83.9	196
WL40-067	178	98.3		M12x1.75	M22x2.5	203	102	220

MODEL	L1 OVERALL LENGTH WITH OPTIONAL ADAPTER MM	L2 OVERALL LENGTH WITHOUT OPTIONAL ADAPTER MM	L3 OVERALL LENGTH WITHOUT ROTATION MM	L4 LENGTH OF FOOT MOUNTING MM	L5 MOUNTING HOLE TO END OF SHAFT MM	L6 SHAFT EXTENSION MM	L7 SPLINE LENGTH MM	L8 LENGTH OF OPTIONAL ADAPTER MM
WL40-028	431	417	335	265	75.1	40.9	20.6	32.5
WL40-050	561	546	422	320	113	61.9	40	52.6
WL40-067	608	579	445	320	130	67.6	49	60.5

MODEL	W1 MOUNTING WIDTH MM	W2 OVERALL WIDTH MM	P1, P2 PORT	V1, V2 PORT
WL40-028	104	133	IS0-1179-1/BSPP 'G' series, size 1/8-1/4. See drawing for details.	IS0-11926/SAE series, size 7/16. See drawing for details.
WL40-050	140	170		
WL40-067	150	203		

*Specification charts are for general reference only, please consult drawing for actual values and tolerances.

SPECIFICATIONS OF WP SERIES

WEITAI
ROTARY ACTUATOR

- **Fully enclosed, heavy-duty design** withstands etreme impact with zero exposed components.
- **Integrated relief valves provides built**-in overload protection.
- **Universal mountfits** major quick couplers & excavator classes.
- Direct replacement for **PT** Series.

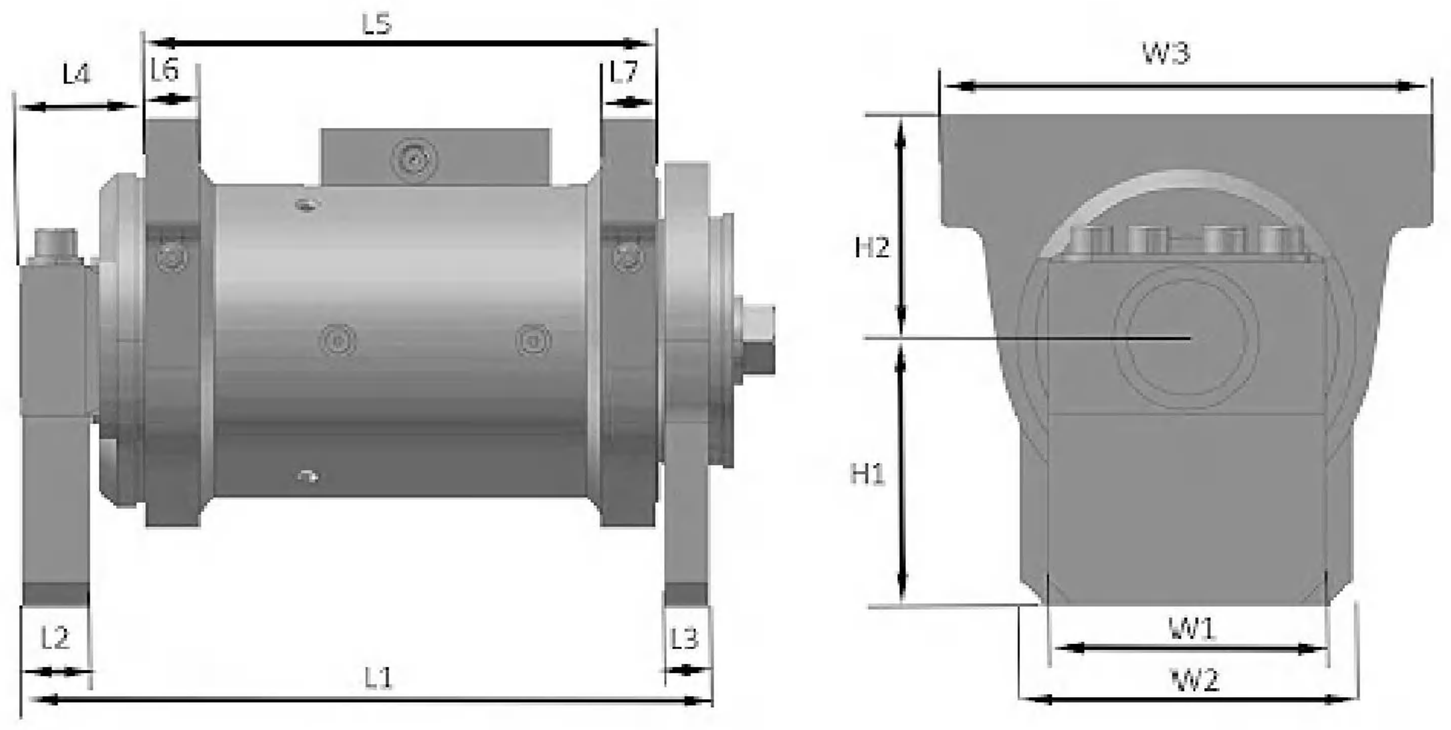

TECHNICAL PARAMETERS

MODEL	EXCAVATOR WEIGHT (T)	DRIVEING TORQUE (NM)	HOLDING TORQUE (NM)	WEIGHT (KG)	DISPLACEMENT (CC)	FLOW (L/MIN)	ROTATION (°)
WP-009-180	1.5-1.8	900	2400	21	234	2-4	180
WP-028-180	1.9-5	2800	6800	65	688	5-16	
WP-047-180	5-7	4700	12000	84	1180	11-32	
WP-073-180	7-10	7300	18000	135	1870	15-44	
WP-105-140	11-14	10500	26000	210	2086	19-58	140
WP-140-140	15-23	14000	35000	270	2754	26-78	
WP-180-140	24-27	18000	46000	320	3618	35-105	
WP-240-140	28-35	24000	59000	420	4668	45-136	

MOUNTING DIMENSIONS

MODEL	L1 (MM)	L2 (MM)	L3 (MM)	L4 (MM)	L5 (MM)	L6 (MM)	L7 (MM)	H1 (MM)	H2 (MM)	W1 (MM)	W2 (MM)	W3 (MM)
WP-009-180	216	12.7	12.7	14.3	211	25.4	25.4	104	88.9	96	96	160
WP-028-180	318	37	22	54	238	26	26	130	113	154	154	240
WP-047-180	387	38	25	70	288	31	31	150	125	154	185	275
WP-073-180	454	38	32	75	345	32	32	170	140	190	206	325
WP-105-140	536	44	32	64	437	38	38	175	151	228	280	420
WP-140-140	533	51	38	80	408	44	44	187	160	254	292	445
WP-180-140	640	50	38	96	496	49	49	225	190	267	305	430
WP-240-140	640	57	44	96	492	57	57	241	205	267	318	530

*Specification charts are for general reference only, please consult drawing for actual values and tolerances.

SPECIFICATIONS OF WT SERIES

WEITAI
ROTARY ACTUATOR

- **Internal oil passages** eliminate external hoses and hose guards.
- **Reduced weight** improves breakout force and cuts fuel consumption.
- **Hardened seals and bearing surfaces** extend service life and lower maintenance costs.
- Direct replacement for **PTA** Series.

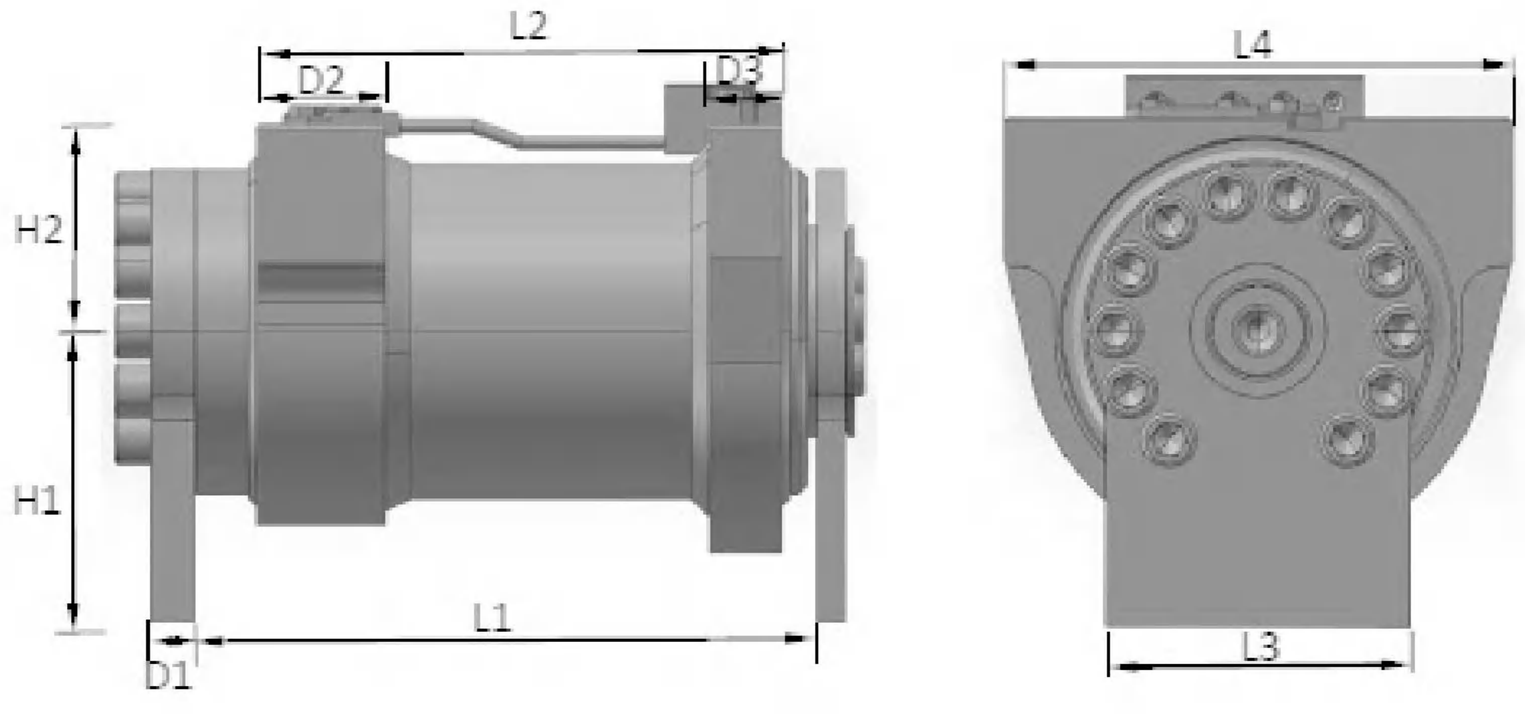

TECHNICAL PARAMETERS

MODEL	EXCAVATOR WEIGHT (T)	DRIVEING TORQUE (NM)	HOLDING TORQUE (NM)	WEIGHT (KG)	DISPLACEMENT (CC)	FLOW (L/MIN)	ROTATION (°)
WT-016-180	1.9-3	1630	6425	38	623	6-19	180
WT-026-180	3-5	2600	9350	56	836	9-28	
WT-043-180	5-7	4375	14850	96	1200	13-38	
WT-070-180	7-10	6650	20450	137	2065	19-58	
WT-130-120	11-18	13300	40725	253	2598	26-78	120
WT-180-120	18-23	17875	53100	357	3474	35-105	
WT-250-120	24-32	24900	70330	450	4730	47-142	
WT-450-120	32-50	15000	111800	574	12000	54-162	

MOUNTING DIMENSIONS

MODEL	L1 (MM)	L2 (MM)	L3 (MM)	L4 (MM)	D1 (MM)	D2 (MM)	D3 (MM)	H1 (MM)	H2 (MM)
WT-016-180	242.1	217.1	120	190	19.1	55.9	31.8	110	82
WT-026-180	271.1	229	130	218	19.1	55.9	31.8	130	93
WT-043-180	342	290	160	254	25	63	43	145	114
WT-070-180	377	323	185	280	30	63	45	160	120
WT-130-120	400	378	273	381	35	82	51	180	145
WT-180-120	491	429	303	465	40	82	57	200	158
WT-250-120	520	468	320	480	45	82	57	210	165
WT-450-120	623	535	400	550	55	73	73	346	277

*Specification charts are for general reference only, please consult drawing for actual values and tolerances.

SPECIFICATIONS OF WBV SERIES

WEITAI
ROTARY ACTUATOR

- **Space-saving design** fits tight installation envelopes.
- **Lightweight** construction preserves excavator efficiency and breakout force.
- **Rugged sealed housing** with no exposed wear parts — built for long-term durability.
- Direct replacement for **BVC/BVD/BVE** Series.

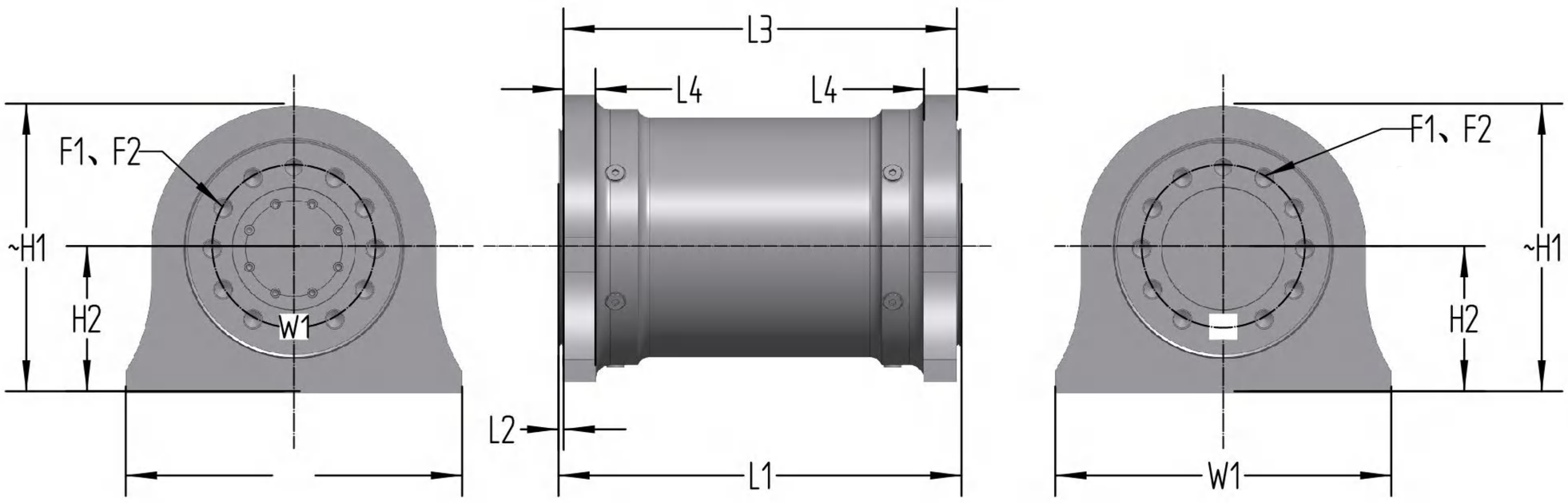

TECHNICAL PARAMETERS

MODEL	EXCAVATOR WEIGHT (T)	PRESSURE (BAR)	HOLDING TORQUE (NM)	WEIGHT (KG)	DISPLACEMENT (CC)	FLOW (L/MIN)	ROTATION (°)
WBV-085-180*	0-1.8	210	2000	16.8	238	2-4	180
WBV-100-180	1.6-2.5	210	2100	20	323	2-4	
WBV-115-180	2.3-4.2	210	4300	49	513	5-10	
WBV-125-180	4-6.2	210	8200	61	840	8-12	
WBV-130-180	6-7.5	210	11000	68	1045	10-15	
WBV-160-180	7.3-10	210	17500	102	2064	20-25	
WBV-240-140	11-16	210	34000	186	2519	25-30	140
WBV-250-140	15-23	210	40000	236	2686	25-30	

MOUNTING DIMENSIONS

MODEL	L1 (MM)	L2 (MM)	L3 (MM)	L4 (MM)	H1 (MM)	H2 (MM)	W1 (MM)	F1 (MM)	F2 (MM)	PORT (BSPP)
WBV-085-180*	194	3	188	20	152	77	164	85	12-M10	1/8
WBV-100-180	245	5	235	20	152	77	150	85	12-M10	1/4
WBV-115-180	344	8	328	30	187	95	220	102	12-M10	1/4
WBV-125-180	277	5	275	30	232	120	275	130	16-M12	1/4
WBV-130-180	345	5	335	30	227	115	270	130	12-M16	1/4
WBV-160-180	383	5	373	35	266	133	300	155	12-M20	3/8
WBV-240-140	412	5	402	38	328	165	390	200	12-M20	3/8
WBV-250-140	430	5	420	40	178	353	412	200	12-M24	3/8

The integrated relief valve is available for all models except WBV-085-180.

WEITAI

ROTARY ACTUATOR

QINGDAO WEITAI HYDRAULIC CO., LTD.

TEL: +86 532 6872 1157

EMAIL: sales@weitai-group.com

WEB: www.wtrotaryactuator.com

