HYDRAULIC FINAL DRIVE

Qingdao Weitai Hydraulic Co., Ltd.

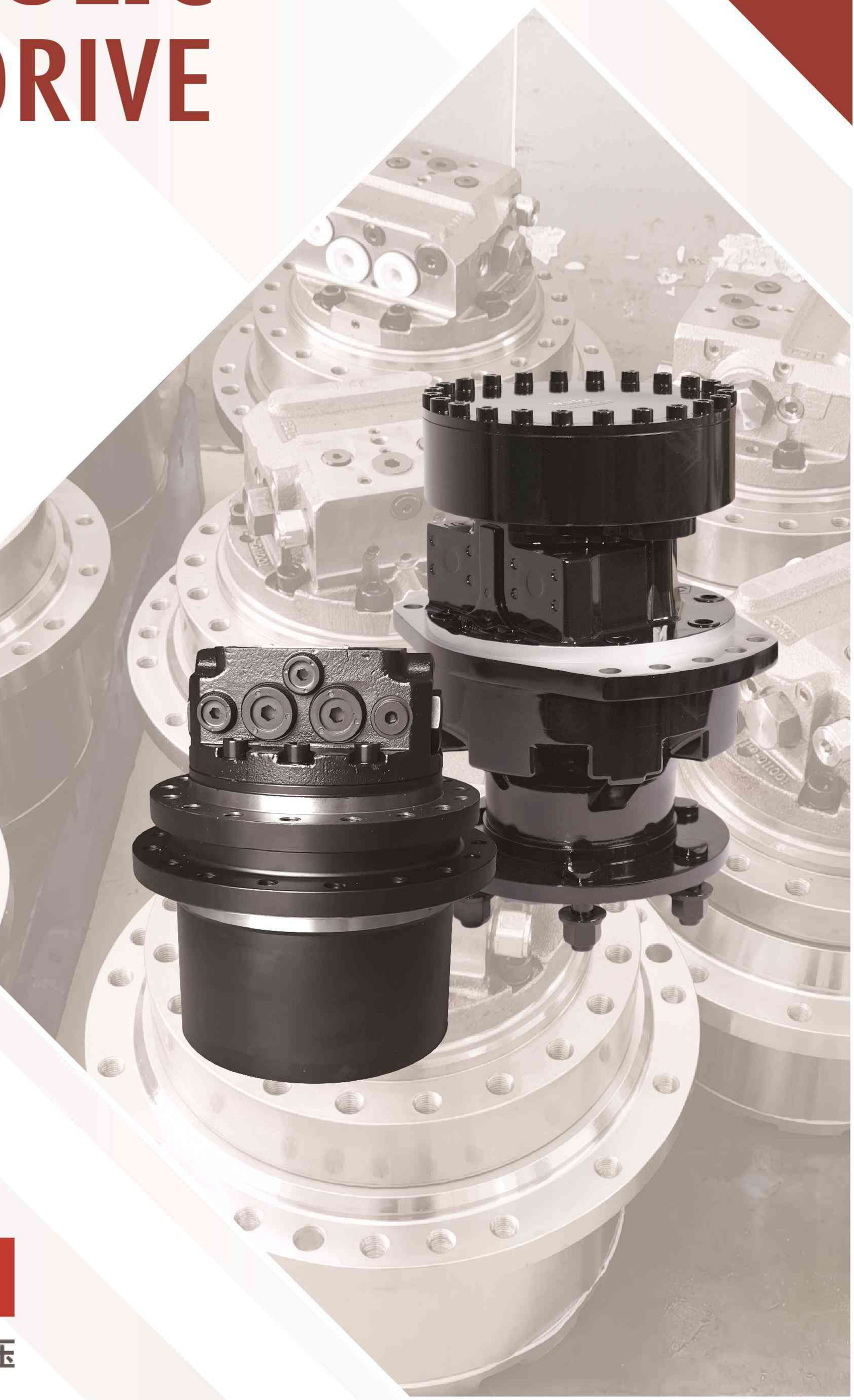

WEITAI

HYDRAULIC 威泰液压

WEITAI
HYDRAULIC 威泰液压

WEITAI HYDRAULIC

As a globally recognized hydraulic brand, WEITAI is your best partner for Hydraulic Travel Motors and Swing Motors. The WTM series Final Drives and WSM Swing Drives are the first choice of leading China excavator manufacturers.

WEITAI leads the way in China and is the first company to develop and manufacture closed-loop Travel Motors. Our WBM series Track Motors find widespread use in Track Loaders and Agricultural Machinery.

With experienced technical teams and professional service teams, WEITAI will be your strongest support both in the pre-sales and post-sales stages.

Let's embark on this exciting journey together, making advancements in the industry and achieving remarkable outcomes. We eagerly anticipate being a part of your success story.



WTM-02 Series

Key Features

- 2-speed swash-plate piston motor.
- Integrated with Planetary Reducer.
- AKD (Auto Kick Down) is optional.
- Single speed model is optional.
- Optional parking brake.
- Cross-reference: PHV-1B, MAG-12V-120E, TRB44, 700C2K.



Specifications

Input Flow	20 L/min	20 L/min	20 L/min
Motor Displacement	7.8/12 cc/r	6.6/15.4 cc/r	7.8/12 cc/r
Working Pressure	210 bar	210 bar	210 bar
2-Speed Switching Pressure	20~70 bar	20~70 bar	20~70 bar
Ratio Options	37	37	37
Max. Output Torque	1500 N.m	1990 N.m	1500 N.m
Max. Output Speed	75 rpm	75 rpm	75 rpm
Machine Application	0.8~2 Ton	0.8~2 Ton	0.8~2 Ton

Connection Dimensions

Frame Orientation Diameter	A	140 mm	140 mm
Frame Holes P.C.D.	B	155 mm	157 mm
Frame Bolt Pattern	M	8-M10 EQS	8-M10 EQS
Sprocket Orientation Diameter	C	140 mm	140 mm
Sprocket Holes P.C.D.	D	155 mm	157 mm
Sprocket Bolt Pattern	N	9-M10 EQS	8-M10 EQS
Flange Distance	E	45 mm	45 mm
Approximate Weight		20 kg	20 kg

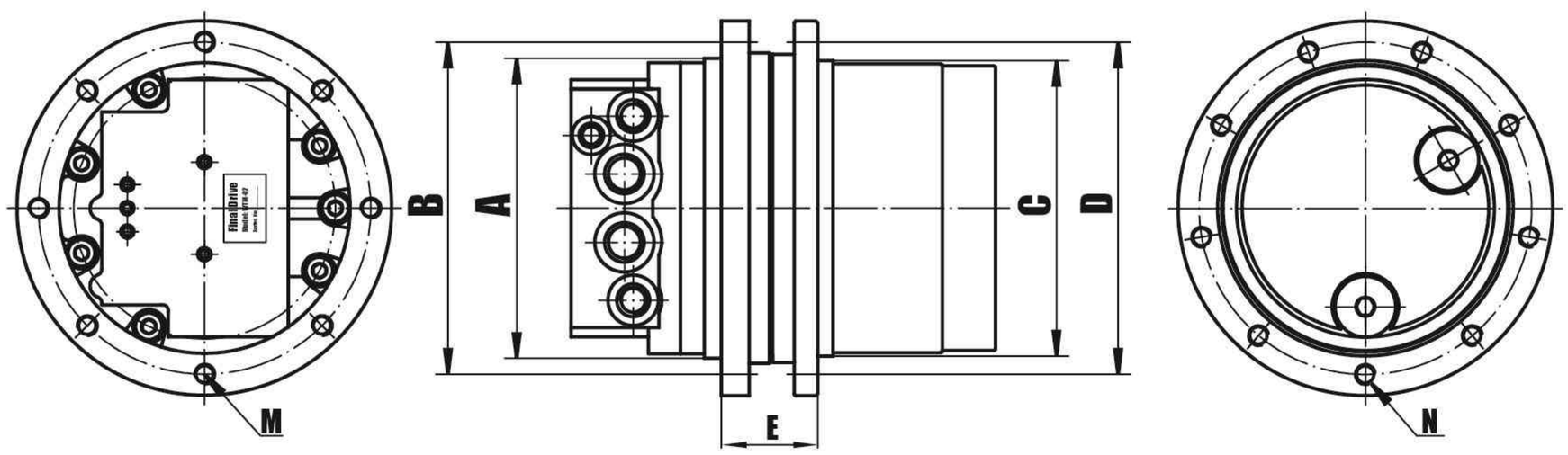

WTM-03 Series

Key Features

- 2-speed swash-plate piston motor.
- Integrated with Planetary Reducer.
- Optional parking brake.
- AKD (Auto Kick Down) is optional.
- Single speed model is optional.
- Cross-reference: PHV-2B, MAG-18V-230, JMV016, 700-2C2K.



Specifications

Input Flow	25 L/min	25 L/min	25 L/min
Motor Displacement	16.1/9.1 cc/r	16.1/9.1 cc/r	18/10 cc/r
Working Pressure	210 bar	210 bar	210 bar
2-Speed Switching Pressure	20~70 bar	20~70 bar	20~70 bar
Ratio Options	39	31	39
Max. Output Torque	2100 N.m	1670 N.m	2350 N.m
Max. Output Speed	70 rpm	88.6 rpm	72 rpm
Machine Application	1.5~2.5 Ton	1.5~2.5 Ton	1.5~2.5 Ton

Connection Dimensions

Frame Orientation Diameter	A	150 mm	150 mm
Frame Holes P.C.D.	B	170 mm	170 mm
Frame Bolt Pattern	M	8-M10 EQS	14-M10 UN-EQS
Sprocket Orientation Diameter	C	160 mm	160 mm
Sprocket Holes P.C.D.	D	180 mm	180 mm
Sprocket Bolt Pattern	N	9-M10 EQS	9-M10 EQS
Flange Distance	E	40 mm	40 mm
Approximate Weight		40 kg	40 kg

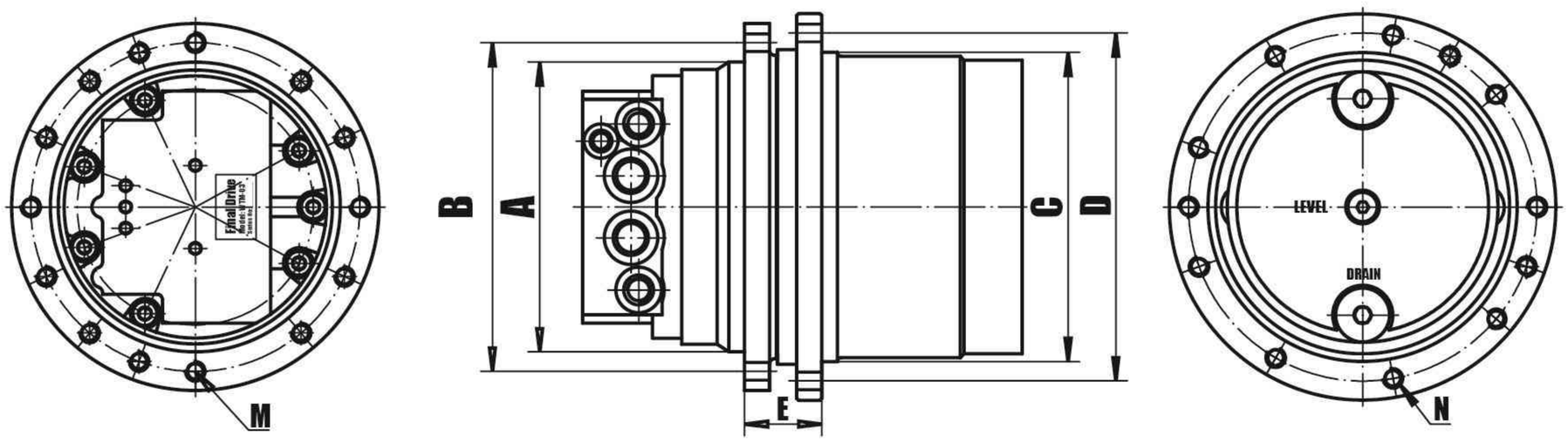

WTM-03D Series

Key Features

- 2-speed swash-plate piston motor.
- Integrated with Planetary Reducer.
- With Parking brake and optional freewheel.
- AKD (Auto Kick Down) is optional.
- Single speed model is optional.
- Cross-reference: PHV-3B, MAG-18V-350, JMV016(2), JMV 023,701-2C2K, PTM-23/14.



Specifications

Input Flow	30 L/min	30 L/min	30 L/min	40 L/min	40 L/min
Motor Displacement	18/12 cc/r	18/10 cc/r	18/10 cc/r	23.2/15.4 cc/r	23.2/15.4 cc/r
Working Pressure	210 bar	210 bar	210 bar	210 bar	210 bar
2-Speed Switching Pressure	20~70 bar	20~70 bar	20~70 bar	20~70 bar	20~70 bar
Ratio Options	48.6	53	42	48.6	53
Max. Output Torque	2900 N.m	3188 N.m	2520 N.m	3770 N.m	4100 N.m
Max. Output Speed	68.5 rpm	57 rpm	72 rpm	53.4 rpm	49 rpm
Machine Application	2.5~3.5 Ton	2.5~3.5 Ton	2.5~3.5 Ton	2.5~3.5 Ton	2.5~3.5 Ton

Connection Dimensions

Frame Orientation Diameter	A	165 mm	165 mm	165 mm
Frame Holes P.C.D.	B	192 mm	192 mm	192 mm
Frame Bolt pattern	M	9 (18)-M12 EQS	9-M12 EQS	9-M12 EQS
Sprocket Orientation Diameter	C	190 mm	190 mm	204 mm
Sprocket Holes P.C.D.	D	212 & 215 mm	215 mm	232 mm
Sprocket Bolt Pattern	N	9-M12 EQS	9-M12 EQS	9-M12 EQS
Flange Distance	E	50 mm	50 mm	50 mm
Approximate Weight		40 kg	45 kg	45 kg

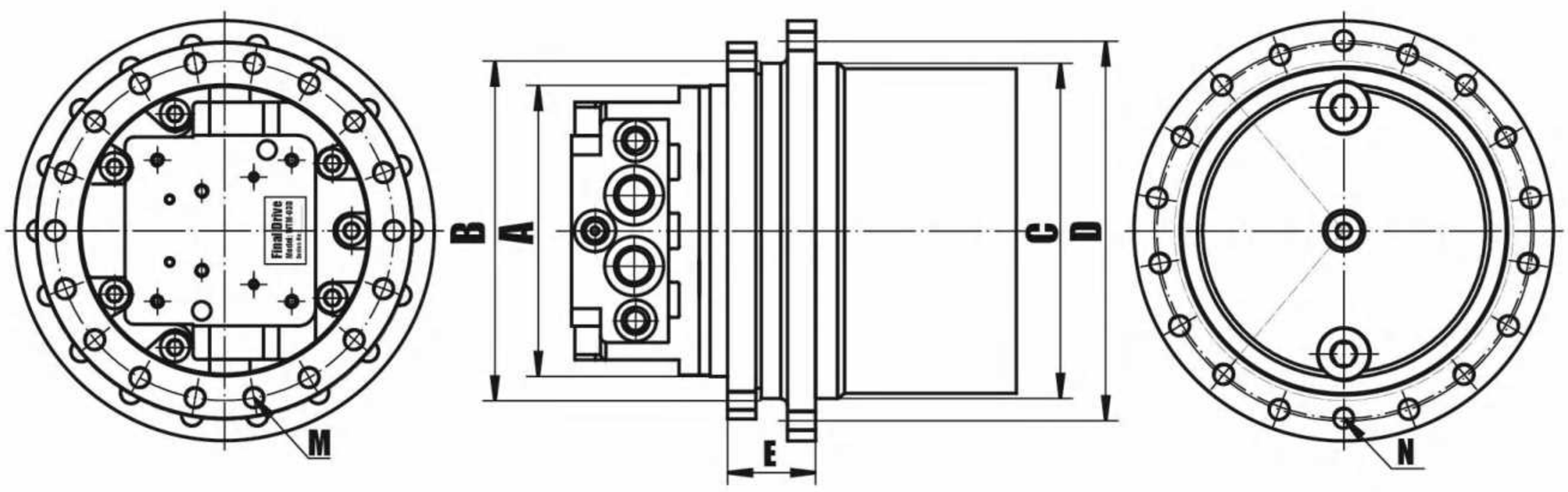

WTM-04 Series

Key Features

- 2-speed swash-plate piston motor.
- Integrated with Planetary Reducer.
- With Parking brake and optional freewheel.
- AKD (Auto Kick Down) is optional.
- Single speed model is optional.
- Cross-reference: MAG-26V-400,GM04VA, 702-C2K, PGR402.



Specifications

Input Flow	40 L/min	40 L/min	40 L/min	40 L/min
Motor Displacement	24/14 cc/r	24/14 cc/r	24/14 cc/r	20.7/13.4cc/r
Working Pressure	210 bar	210 bar	210 bar	210 bar
2-Speed Switching Pressure	20~70 bar	20~70 bar	20~70 bar	20~70 bar
Ratio Options	52.7	37.8	52.7	52.7
Max. Output Torque	4200 N.m	3000 N.m	4200 N.m	3645 N.m
Max. Output Speed	54 rpm	75.6 rpm	54 rpm	56.6 rpm
Machine Application	3~4 Ton	3~4 Ton	3~4 Ton	3~4 Ton

Connection Dimensions

Frame Orientation Diameter	A	165 mm	165 mm	165 mm	165 mm
Frame Holes P.C.D.	B	192 mm	192 mm	192 mm	192 mm
Frame Bolt Pattern	M	9-M12 EQS	9-M12 EQS	12-M12 EQS	9&12-M12 EQS
Sprocket Orientation Diameter	C	210 mm	210 mm	210 mm	204 mm
Sprocket Holes P.C.D.	D	232 mm	232 mm	232 mm	232 mm
Sprocket Bolt Pattern	N	9-M12 EQS	12-M12 EQS	12-M12 EQS	9&12-M12 EQS
Flange Distance	E	70 mm	70 mm	70 mm	70 mm
Approximate Weight		52 kg	52 kg	52 kg	52 kg

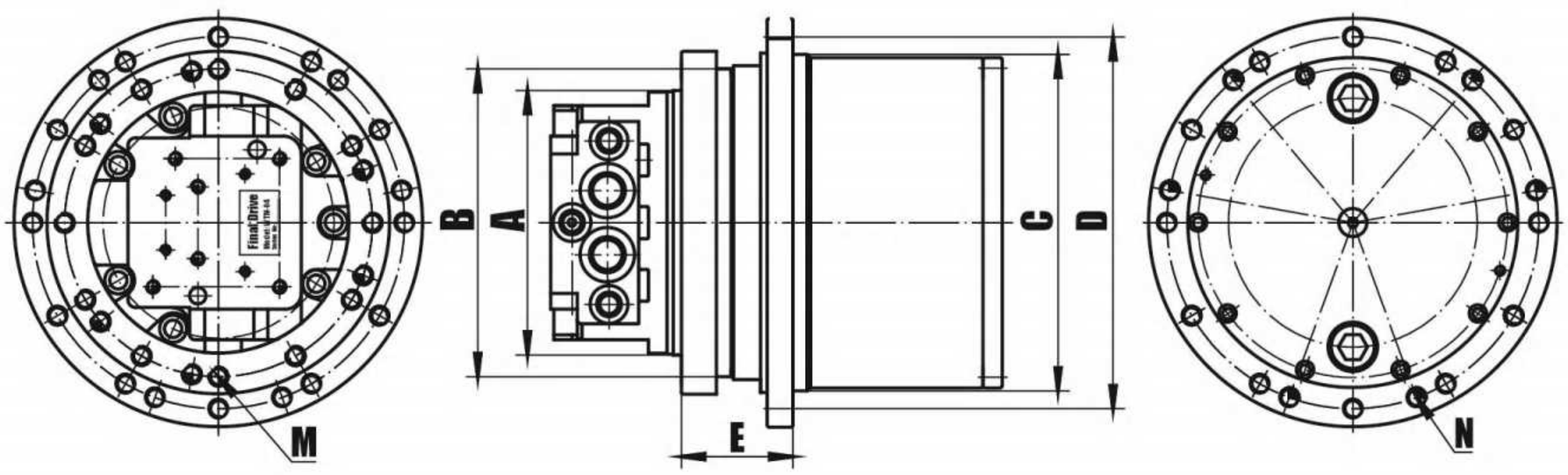

WTM-06/06I Series

Key Features

- 2-speed swash-plate piston motor.
- Integrated with Planetary Reducer.
- With Parking brake and optional freewheel.
- AKD (Auto Kick Down) is optional.
- Single speed model is optional.
- Cross-reference: PHV-4B-60B, PHV-4B-70D, DM05, GM06VA.



Specifications

Input Flow	50 L/min	50 L/min	60 L/min
Motor Displacement	34/19 cc/r	34/19 cc/r	36.5/19 cc/r
Working Pressure	245 bar	245 bar	245 bar
2-Speed Switching Pressure	20~70 bar	20~70 bar	20~70 bar
Ratio Options	47.5	36.8	58.4
Max. Output Torque	6300 N.m	4800 N.m	8300 N.m
Max. Output Speed	55 rpm	71 rpm	54 rpm
Machine Application	5~6 Ton	5~6 Ton	5~6 Ton

Connection Dimensions

Frame Orientation Diameter	A	180 mm	180 mm	180 mm
Frame Holes P.C.D.	B	220 mm	220 mm	220 mm
Frame Bolt Pattern	M	9-M14 EQS	9-M14 EQS	14-M14 EQS
Sprocket Orientation Diameter	C	230 mm	230 mm	230 mm
Sprocket Holes P.C.D.	D	262 mm	262 mm	262 mm
Sprocket Bolt Pattern	N	9&12-M14 EQS	12-M14 EQS	14-M14 EQS
Flange Distance	E	75 mm	75 mm	75 mm
Approximate Weight		70 kg	70 kg	70 kg

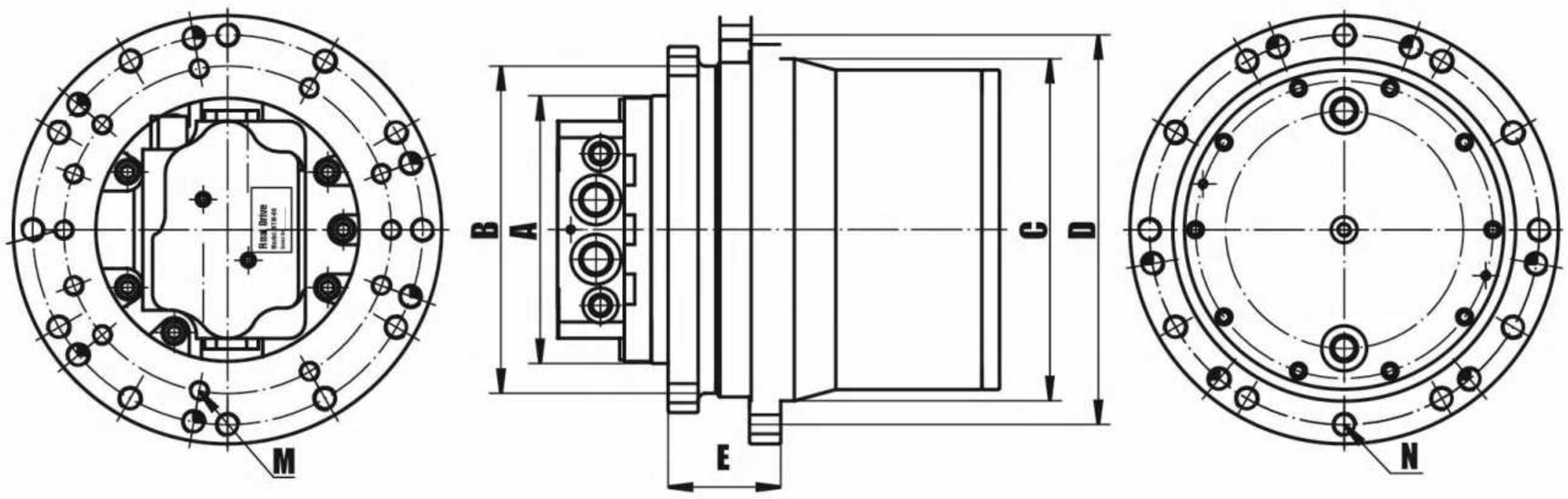

WTM-06J Series

Key Features

- 2-speed swash-plate piston motor.
- Integrated with Planetary Reducer.
- With Parking brake and optional freewheel.
- AKD (Auto Kick Down) is optional.
- Single speed model is optional.
- Cross-reference: Mag-33VP-550F, MAG-33VP-650F,JMV-044, 704C2K.



Specifications

Input Flow	50 L/min
Motor Displacement	34/19 cc/r
Working Pressure	275 bar
2-Speed Switching Pressure	20~70 bar
Ratio Options	55
Max. Output Torque	8100 N.m
Max.Output Speed	48 rpm
Machine Application	5.5~6.5 Ton

Connection Dimensions

Frame Orientation Diameter	A	200 mm
Frame Holes P.C.D.	B	240 mm
Frame Bolt Pattern	M	9&12-M14 EQS
Sprocket Orientation Diameter	C	230 mm
Sprocket Holes P.C.D.	D	262 mm
Sprocket Bolt Pattern	N	9&12-M14 EQS
Flange Distance	E	68 mm
Approximate Weight		70 kg

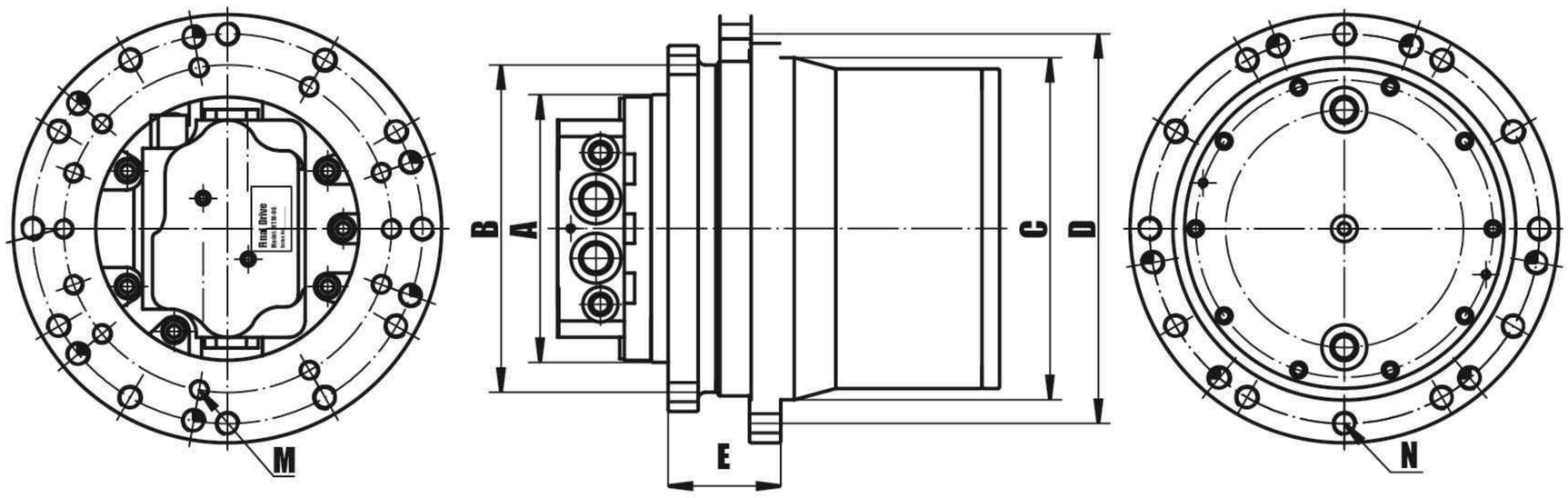

WTM-07 Series

Key Features

- 2-speed swash-plate piston motor.
- Integrated with Planetary Reducer.
- With Parking brake and optional freewheel.
- Auto speed switch is optional.
- Speed sensor is optional.
- Cross-reference: JMV41, TM07VC, 6TM442201.



Specifications

Input Flow	60 L/min	80 L/min	80 L/min
Motor Displacement	44/22 cc/r	53/34 cc/r	53/34 cc/r
Working Pressure	275 bar	275 bar	300 bar
2-Speed Switching Pressure	20~70 bar	20~70 bar	20~70 bar
Ratio Options	53.7	53.7	20.8
Max. Output Torque	10500 N.m	12500 N.m	5260 N.m
Max. Output Speed	50 rpm	44 rpm	113 rpm
Machine Application	6~8 Ton	6~8 Ton	6~8 Ton

Connection Dimensions

Frame Orientation Diameter	A	210 mm	210 mm	210 mm
Frame Holes P.C.D.	B	244 mm	250 mm	244 mm
Frame Bolt Pattern	M	12-M14 EQS	12-M16 EQS	12-M14 EQS
Sprocket Orientation Diameter	C	250 mm	250 mm	250 mm
Sprocket Holes P.C.D.	D	282 mm	282 mm	282 mm
Sprocket Bolt Pattern	N	12-M14 EQS	12-M14 EQS	12-M14 EQS
Flange Distance	E	68 mm	68 mm	68 mm
Approximate Weight		75 kg	75 kg	75 kg

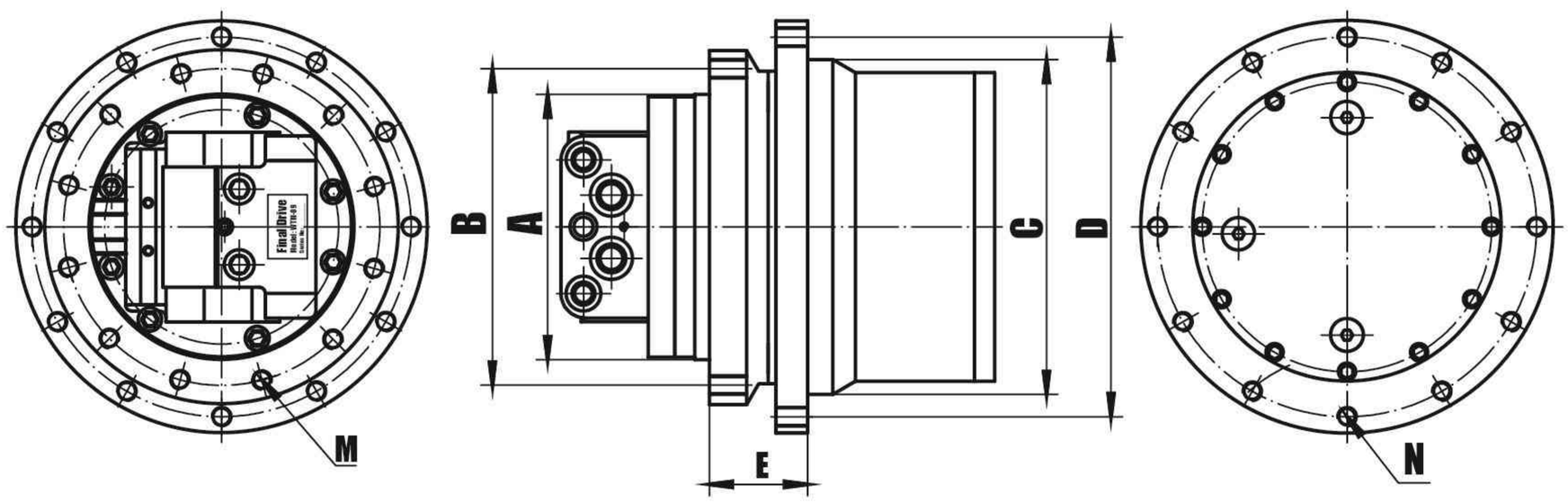

WTM-09 Series

Key Features

- 2-speed swash-plate piston motor.
- Integrated with Planetary Reducer.
- With Parking brake and standard freewheel.
- Separated brake control available.
- Speed sensor is optional.
- Cross-reference: PHV-5B, DM09, MAG-44VP-800, MAG-50VP-900, GM09VN, GM10VA, TM10VD, JMV047.



Specifications

Input Flow	80 L/min	80 L/min
Motor Displacement	53/34 cc/r	50/28 cc/r
Working Pressure	300 bar	300 bar
2-Speed Switching Pressure	20~70 bar	20~70 bar
Ratio Options	45.57	45.57
Max. output Torque	11500 N.m	10860 N.m
Max. Output Speed	51 rpm	62 rpm
Machine Application	7~9 Ton	7~9 Ton

Connection Dimensions

Frame Orientation Diameter	A	210 mm	210 mm	210 mm	210 mm	210 mm
Frame Holes P.C.D.	B	250 mm	250 mm	250 mm	250 mm	250 mm
Frame Bolt Pattern	M	12-M16	12-M16	14-M16	12-M16	16-M16
Sprocket Orientation Diameter	C	265 mm	265 mm	265 mm	265 mm	265 mm
Sprocket Holes P.C.D.	D	300 mm	300 mm	300 mm	300 mm	300 mm
Sprocket Bolt Pattern	N	12-M14	12-M16	14-M14	15-M14	16-M14
Flange Distance	E	80 mm	80 mm	80 mm	80 mm	80 mm
Approximate Weight		95 kg	95 kg	95 kg	95 kg	95 kg

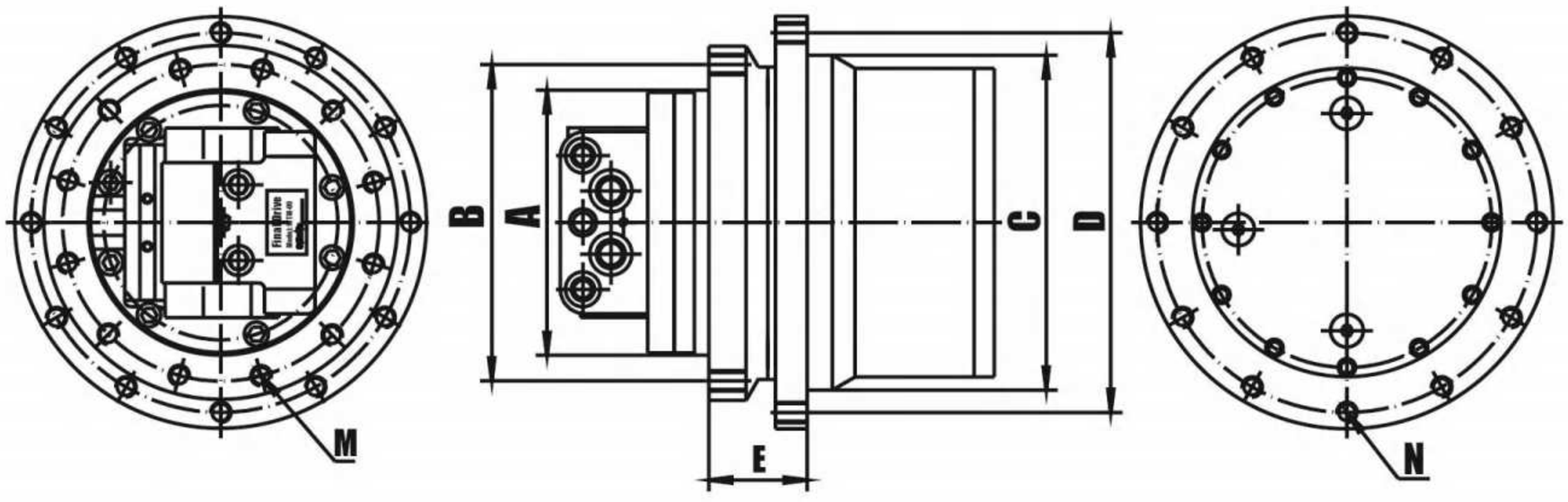

WTM-0902 Series

Key Features

- Compact design.
- 2-speed swash-plate piston motor.
- Integrated with Planetary Reducer.
- With Parking brake and optional freewheel.
- Cross-reference: GFT 9T2, 705C2K.



Specifications

Input Flow	60 L/min
Motor Displacement	45/23 cc/r
Working Pressure	275 bar
2-Speed Switching Pressure	20~70 bar
Ratio Options	55.3
Max. Output Torque	11000 N.m
Max. Output Speed	47 rpm
Machine Application	7~9 Ton

Connection Dimensions

Frame Orientation Diameter	A	210 mm	210 mm	210 mm	210 mm
Frame Holes P.C.D.	B	244 mm	244 mm	244 mm	244 mm
Frame Bolt Pattern	M	12-M14 EQS	12-M14 EQS	12-M14 EQS	12-M14 EQS
Sprocket Orientation Diameter	C	230 mm	230 mm	230 mm	230 mm
Sprocket Holes P.C.D.	D	260 mm	260 mm	260 mm	260 mm
Sprocket Bolt Pattern	N	16-M16 EQS	12-M16 EQS	12-M14 EQS	12-M14 EQS
Flange Distance	E	60 mm	60 mm	75 mm	60 mm
Approximate Weight		70 kg	70 kg	70 kg	70 kg

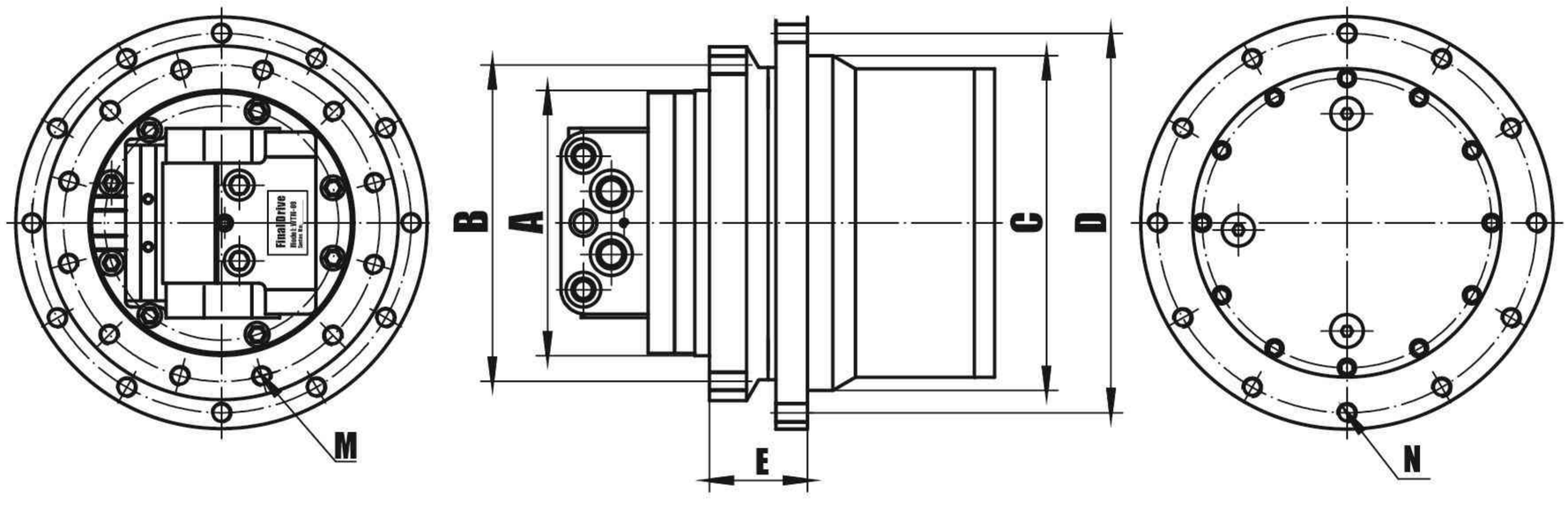

WTM-10 Series

Key Features

- 2-speed swash-plate piston motor.
- Integrated with Planetary Reducer.
- With Parking brake and standard freewheel.
- Separated brake control available.
- Speed sensor is optional.
- Cross-reference: TM10, GM10.
- Auto speed switch is optional.



Specifications

Input Flow	80 L/min	80 L/min	130 L/min
Motor Displacement	53/34 cc/r	50/28 cc/r	75 cc/r
Working Pressure	300 bar	300 bar	260 bar
2-Speed Switching Pressure	20~70 bar	20~70 bar	20~70 bar
Ratio Options	54.4	54.4	54.4
Max. Output Torque	13700 N.m	12800 N.m	16900 N.m
Max. Output Speed	48 rpm	55 rpm	31.8 rpm
Machine Application	9~11 Ton	9~11 Ton	9~12 Ton

Connection Dimensions

Frame Orientation Diameter	A	210 mm
Frame Holes P.C.D.	B	250 mm
Frame Bolt Pattern	M	12-M16 EQS
Sprocket Orientation Diameter	C	265 mm
Sprocket Holes P.C.D.	D	300 mm
Sprocket Bolt Pattern	N	12-M14 EQS
Flange Distance	E	80 mm
Approximate Weight		100 kg

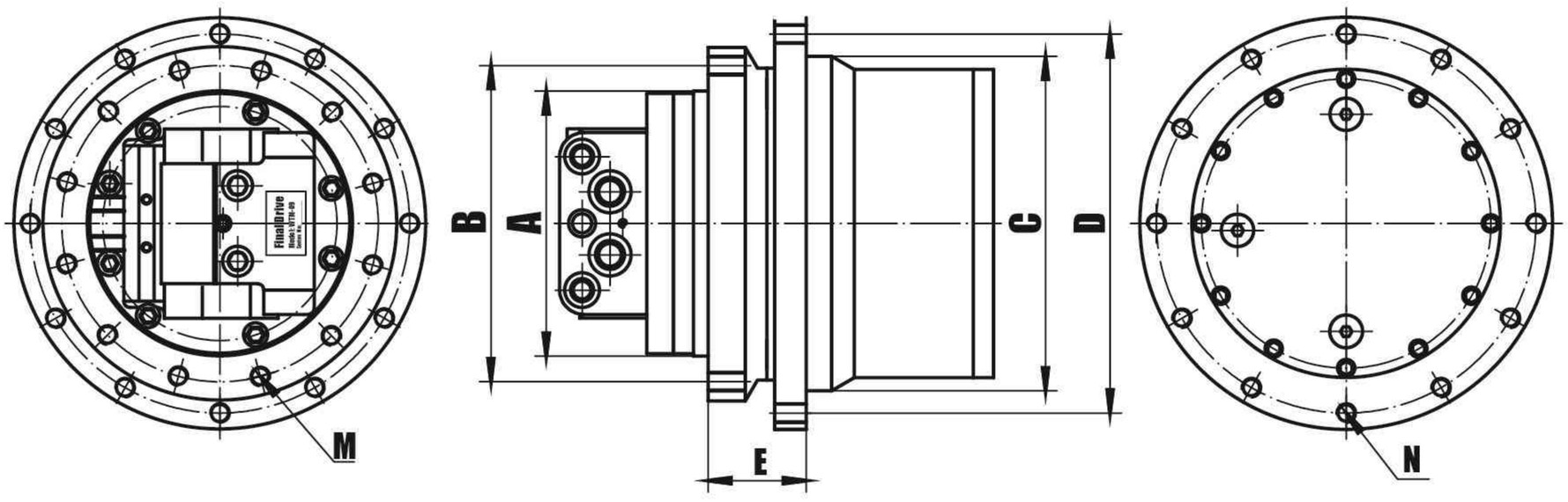

WTM-18 Series

Key Features

- 2-speed swash-plate piston motor.
- Integrated with Planetary Reducer.
- With Parking brake and optional freewheel.
- Cross-reference: TM18VC, GM18VL, 14TM.



Specifications

Input Flow	130 L/ min
Motor Displacement	67/43 cc/r
Working Pressure	300 bar
2-Speed Switching Pressure	20~70 bar
Ratio Options	53
Max. Output Torque	16900 N.m
Max. Output Speed	57 rpm
Machine Application	10~13 Ton

Connection Dimensions

Frame Orientation Diameter	A	246 mm
Frame Holes P.C.D.	B	280 mm
Frame Bolt Pattern	M	20-M16 EQS
Sprocket Orientation Diameter	C	324 mm
Sprocket Holes P.C.D.	D	364 mm
Sprocket Bolt Pattern	N	15-M16 EQS
Flange Distance	E	100 mm
Approximate Weight		135 kg

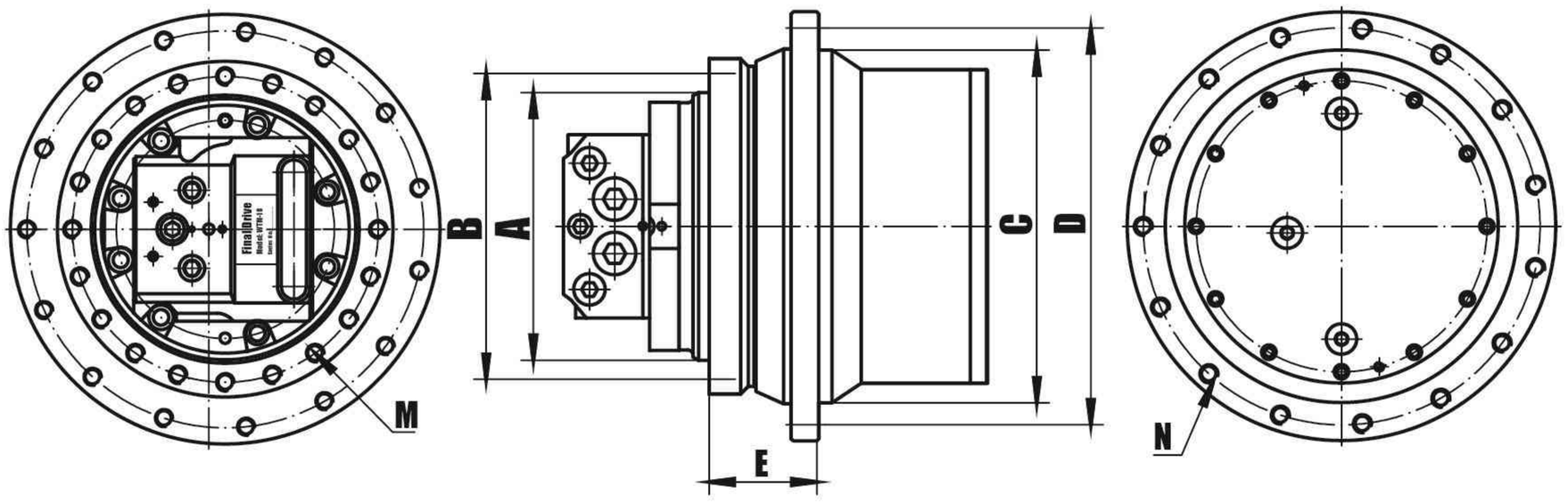

WTM-22 Series

Key Features

- 2-speed swash-plate piston motor.
- Integrated with Planetary Reducer.
- With Parking brake and standard freewheel.
- Cross-reference: MAG-85VP-2400,TM22VC, GM21VC, JMV076.



Specifications

Input Flow	150 L/min	150 L/min	150 L/min
Motor Displacement	82/54 ccr	82/54 ccr	110/72 ccr
Working Pressure	275 bar	340 bar	275 bar
2-Speed Switching Pressure	20~70 bar	20~70 bar	20~70 bar
Ratio Options	26.5	53.7	53.7
Max. Output Torque	9500 N.m	24000 N.m	25800 N.m
Max. Output Speed	104 rpm	51 rpm	38 rpm
Machine Application	10~12 Ton	13~16 Ton	10~12 Ton

Connection Dimensions

Frame Orientation Diameter	A	246 mm
Frame Holes P.C.D.	B	280 mm
Frame Bolt Pattern	M	20-M16 EQS
Sprocket Orientation Diameter	C	324 mm
Sprocket Holes P.C.D.	D	364 mm
Sprocket Bolt Pattern	N	15+3-M16 EQS
Flange Distance	E	100 mm
Approximate Weight		150 kg

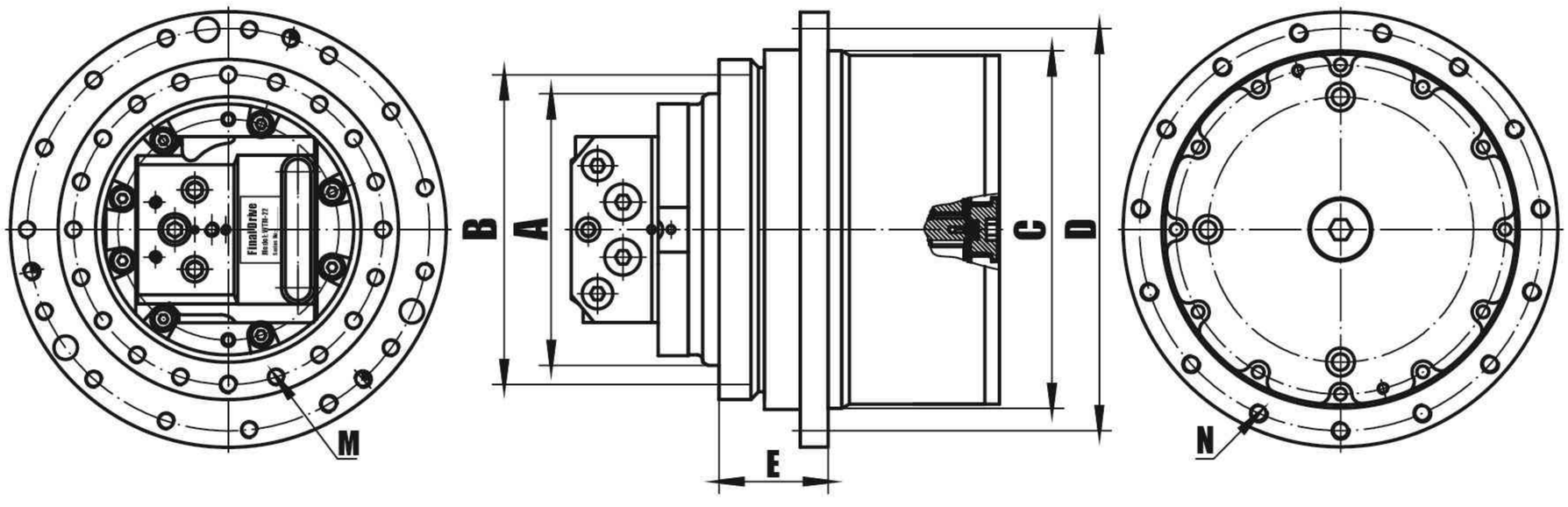

WTM-22C Series

Key Features

- 2-speed swash-plate piston motor.
- Integrated with Planetary Reducer.
- With Parking brake and standard freewheel.
- Cross-reference: MAG-85VP-1800.



Specifications

Input Flow	150 L/ min	150 L/ min	150 L/ min
Motor Displacement	80/47 cc/r	88/51 cc/r	88/51 cc/r
Working Pressure	300 bar	300 bar	300 bar
2-Speed Switching Pressure	20~70 bar	20~70 bar	20~70 bar
Ratio Options	53	41	52
Max. Output Torque	20500 N.m	19000 N.m	25210 N.m
Max. Output Speed	59 rpm	72 rpm	56 rpm
Machine Application	12~16 Ton	12~16 Ton	13~16 Ton

Connection Dimensions

Frame Orientation Diameter	A	290 mm	280 mm	330 mm
Frame Holes P.C.D.	B	320 mm	320 mm	370 mm
Frame Bolt Pattern	M	16-M16 EQS	14/16-M16 EQS	16-M16 EQS
Sprocket Orientation Diameter	C	324 mm	350 mm	365 mm
Sprocket Holes P.C.D.	D	364 mm	400 mm	405 mm
Sprocket Bolt Pattern	N	15+3-M16 EQS	16-M20 EQS	16-M20 EQS
Flange Distance	E	85 mm	93 mm	99.5 mm
Approximate Weight		150 kg	180 kg	190 kg

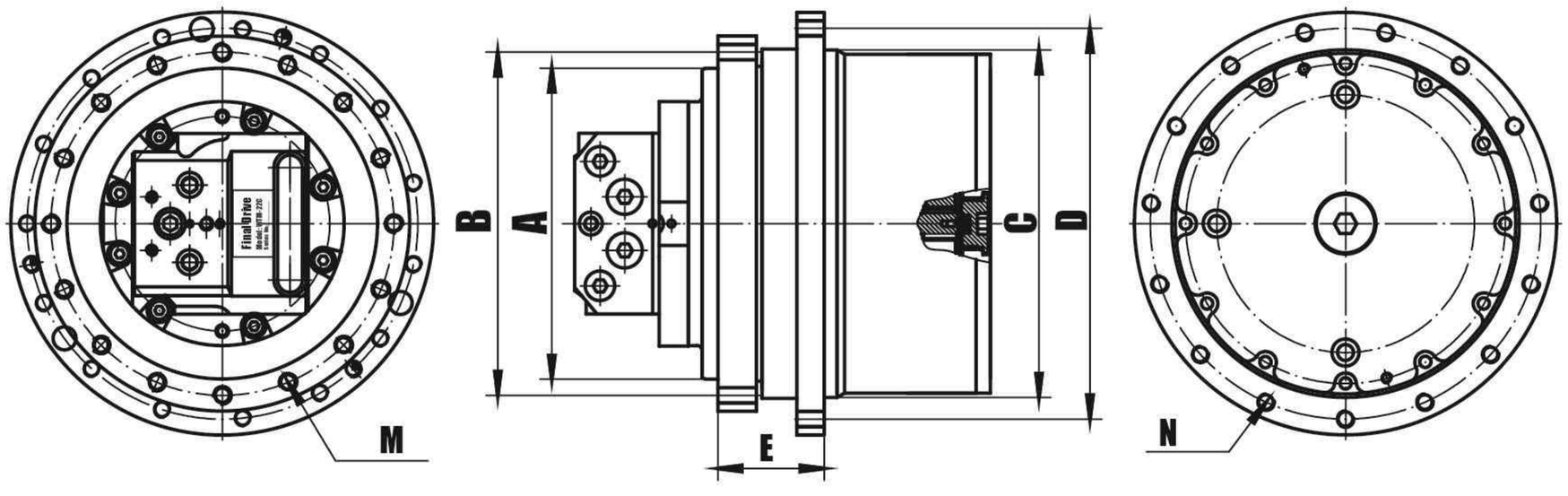

WTM-30 Series

Key Features

- 2-speed swash-plate piston motor.
- Integrated with Planetary Reducer.
- With Parking brake and standard freewheel.
- Cross-reference: TM30 Series.



Specifications

Input Flow	150 L/ min	160 L/ min
Motor Displacement	82/54 cc/r	158/84 cc/r
Working Pressure	300 bar	350 bar
2-Speed Switching Pressure	20~70 bar	20~70 bar
Ratio Options	85	39
Max. Output Torque	33000 N.m	34460 N.m
Max. Output Speed	32.6 rpm	48.7 rpm
Machine Application	18~22 Ton	18~22 Ton

Connection Dimensions

Frame Orientation Diameter	A	246 mm	300 mm
Frame Holes P.C.D.	B	280 mm	340 mm
Frame Bolt Pattern	M	20-M16 EQS	30-M16 EQS
Sprocket Orientation Diameter	C	324 mm	362 mm
Sprocket Holes P.C.D.	D	364 mm	402 mm
Sprocket Bolt Pattern	N	15+3-M16 EQS	24-M16 EQS
Flange Distance	E	100 mm	100 mm
Approximate Weight		150 kg	240 kg

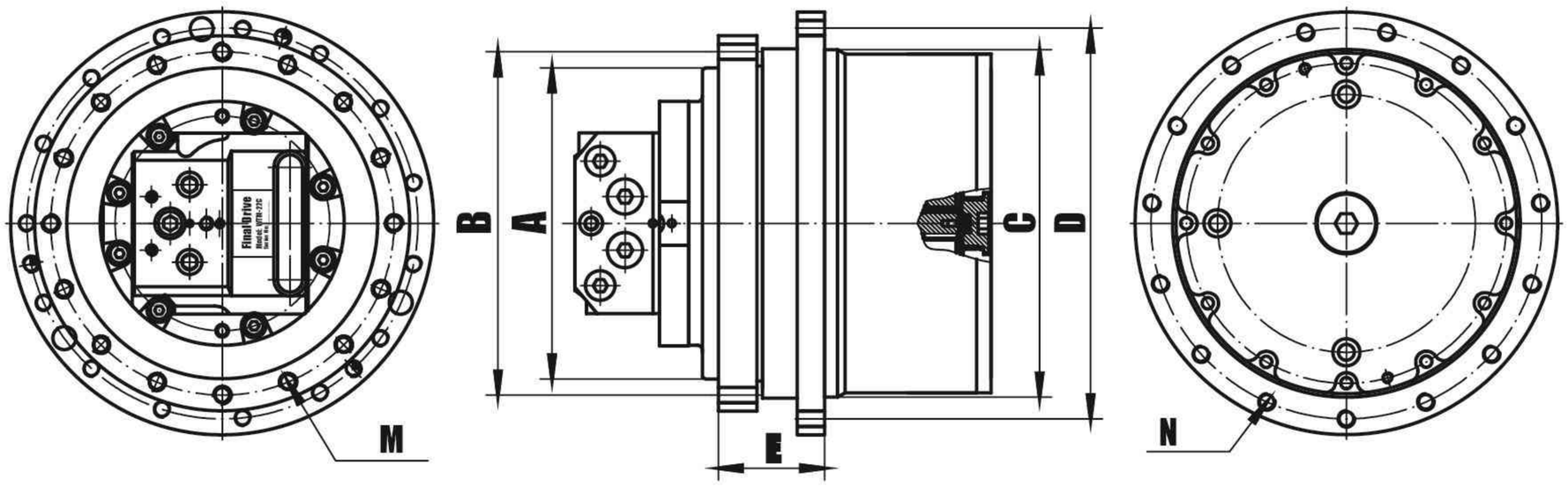

WTM-40 Series

Key Features

- 2-speed swash-plate piston motor.
- Integrated with Planetary Reducer.
- With Parking brake and standard freewheel.
- Separated brake control available.
- Thread port and flange port available.
- Cross-reference: MAG-170VP-3800, TM40VA, GM38VB, JMV147, 710C2K.



Specifications

Input Flow	260 L/ min	260 L/ min	260 L/ min	260 L/ min
Motor Displacement	169/92 cc/r	180/95 cc/r	180/95 cc/r	140/80cc/r
Working Pressure	350 bar	343 bar	343 bar	343 bar
2-Speed Switching Pressure	20~70 bar	20~70 bar	20~70 bar	20~70 bar
Ratio Options	50	43.2/48	50.5	53.7
Max. Output Torque	47000 N.m	47100 N.m	49600 N.m	41200 N.m
Max. Output Speed	54.8 rpm	57 rpm	54rpm	48rpm
Machine Application	18~22 Ton	18~22 Ton	18~22 Ton	18~22 Ton

Connection Dimensions

Frame Orientation Diameter	A	300 mm
Frame Holes P.C.D.	B	340 mm
Frame Bolt Pattern	M	30-M16 Equally
Sprocket Orientation Diameter	C	402 mm
Sprocket Holes P.C.D.	D	440 mm
Sprocket Bolt Pattern	N	30-M16 (22 Equally)
Flange Distance	E	98 mm
Approximate Weight		320 kg

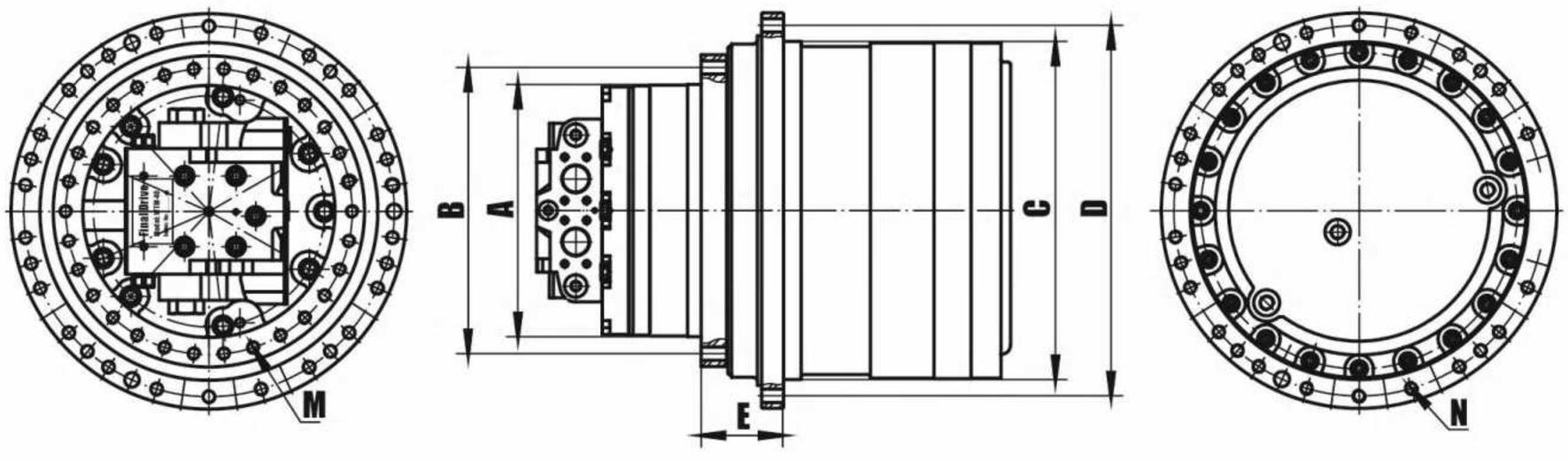

WTM-60 Series

Key Features

- 2-speed swash-plate piston motor.
- Integrated with Planetary Reducer.
- With Parking brake and standard freewheel.
- Separated brake control available.
- Thread port.
- Cross-reference: MAG-230VP-6000, TM50VC, GM60VA, JMV155.



Specifications

Input Flow	300 L/ min	210 L/ min
Motor Displacement	180/110 cc/r	107/70 cc/r
Working Pressure	343 bar	280 bar
2-Speed Switching Pressure	20~70 bar	20~70 bar
Ratio Options	64.8	135
Max. Output Torque	63680 N.m	64400 N.m
Max. Output Speed	42 rpm	22 rpm
Machine Application	25~32 Ton	35~45 Ton

Connection Dimensions

Frame Orientation Diameter	A	380 mm	380 mm	280 mm
Frame Holes P.C.D.	B	440 mm	440 mm	325 mm
Frame Bolt Pattern	M	26-M20 Equally	18-M24 Equally	24-M20 Equally
Sprocket Orientation Diameter	C	450 mm	435 mm	402 mm
Sprocket Holes P.C.D.	D	492 mm	472 mm	440 mm
Sprocket Bolt Pattern	N	18-M24 Equally	24-M20 Equally	22+8-M16
Flange Distance	E	102 mm	102 mm	110 mm
Approximate Weight		400 kg	360 kg	240 kg

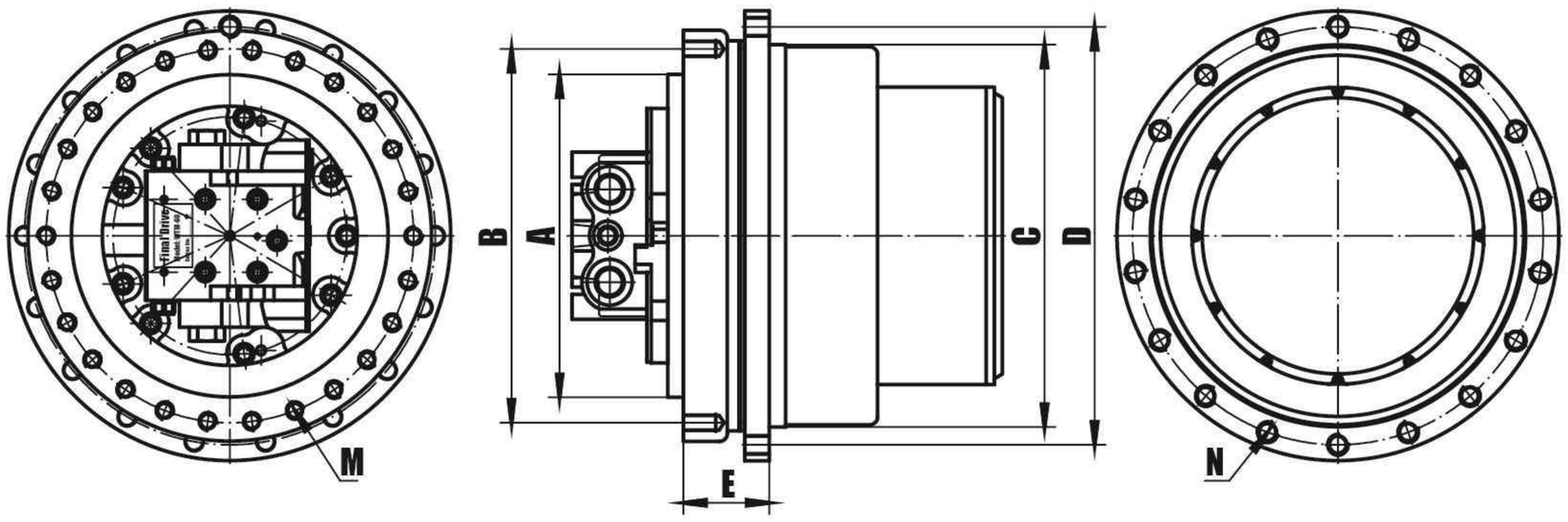

WTM-75 Series

Key Features

- Highly efficient swash plate axial piston motor.
- 2-speed motor with a high ratio for various applications.
- Build-in parking brake.
- Compact structure and light weight.
- Reliable quality and long-lasting durability.
- Cross-reference: TM60VD, TM70VC.



Specifications

Input Flow	300 L/ min	300 L/ min
Motor Displacement	185/115 cc/r	270/160 cc/r
Working Pressure	343 bar	343 bar
2-Speed Switching Pressure	20~70 bar	20~70 bar
Ratio Options	70	50
Max. Output Torque	70060 N.m	66200 N.m
Max. Output Speed	35 rpm	37.7 rpm
Machine Application	34~40 Ton	34~40 Ton

Connection Dimensions

Frame Orientation Diameter	A	380 mm	380 mm
Frame Holes P.C.D.	B	425 mm	425 mm
Frame Bolt Pattern	M	26-M20 EQS	20-M24 EQS
Sprocket Orientation Diameter	C	450 mm	490 mm
Sprocket Holes P.C.D.	D	490 mm	535 mm
Sprocket Bolt Pattern	N	24-M20 EQS	28-M20 EQS
Flange Distance	E	112 mm	112 mm
Approximate Weight		450 kg	450 kg

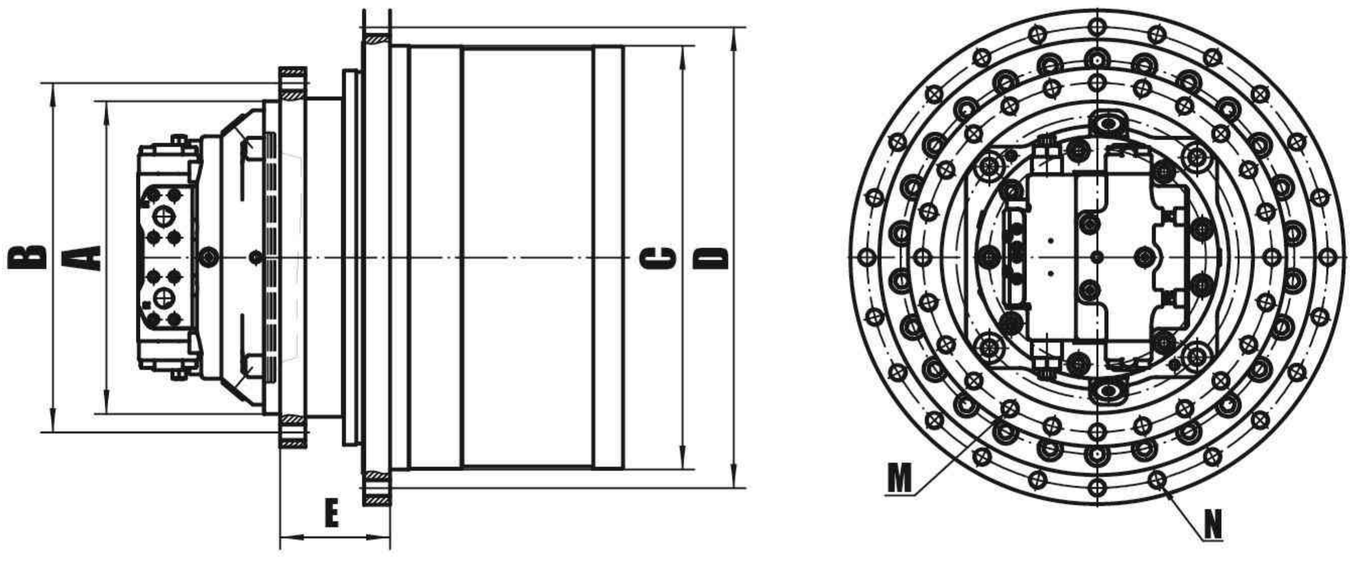

WTM-80 Series

Key Features

- Highly efficient swash plate axial piston motor.
- 2-speed motor with a high ratio for various applications.
- Build-in parking brake.
- Compact structure and light weight.
- Reliable quality and long-lasting durability.
- Other displacement and ratio are available



Specifications

Input Flow	230 L/ min	370 L/ min	370 L/ min
Motor Displacement	110/64 cc/r	290/170 cc/r	290/170 cc/r
Working Pressure	280 bar	350 bar	343 bar
2-Speed Switching Pressure	20~70 bar	20~70 bar	20~70 bar
Ratio Options	162	60.6	67
Max. Output Torque	79450 N.m	96285 N.m	92460 N.m
Max. Output Speed	22 rpm	35.8 rpm	32.4 rpm
Machine Application	40~50 Ton	42~50 Ton	42~50 Ton

Connection Dimensions

Frame Orientation Diameter	A	280 mm	410 mm
Frame Holes P.C.D.	B	325 mm	455 mm
Frame Bolt Pattern	M	24-M20 EQS	27-M24 EQS
Sprocket Orientation Diameter	C	410 mm	570 mm
Sprocket Holes P.C.D.	D	455 mm	620 mm
Sprocket Bolt Pattern	N	24-M20 EQS	24-M24 EQS
Flange Distance	E	110 mm	148 mm
Approximate Weight		400 kg	650 kg

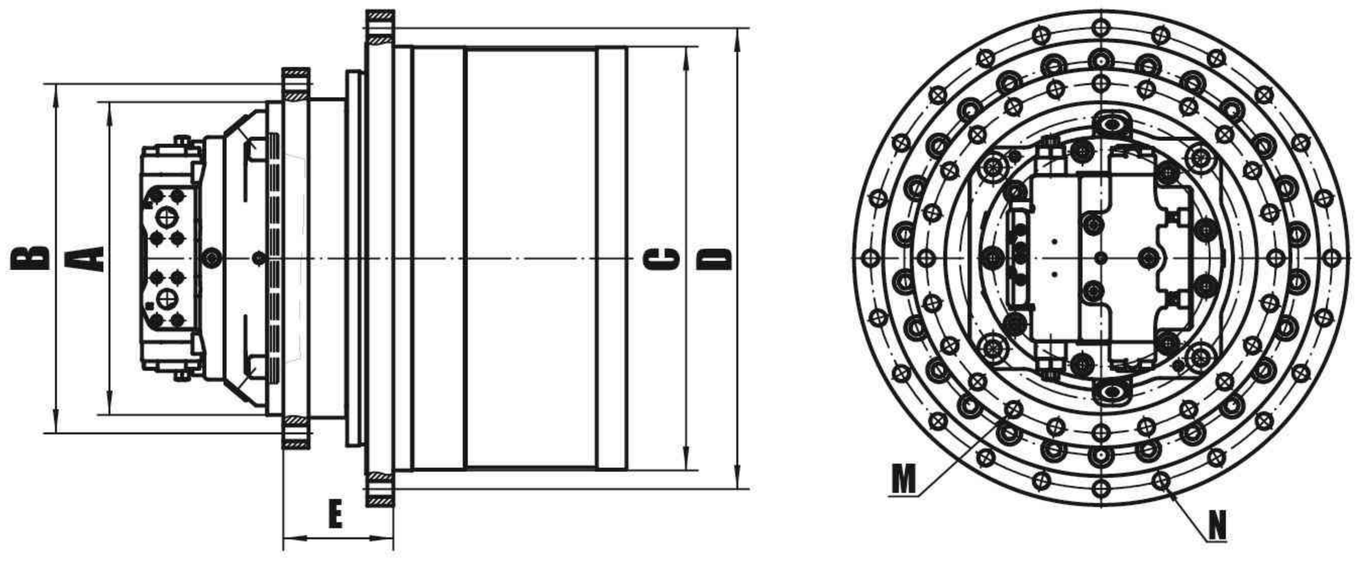

WTM-100 Series

Key Features

- Highly efficient swash plate axial piston motor.
- 2-speed motor with a high ratio for various applications.
- Build-in parking brake.
- Compact structure and light weight.
- Reliable quality and long-lasting durability.



Specifications

Input Flow	450 L/ min	450 L/ min	450 L/ min
Motor Displacement	304/175 cc/r	304/196.8 cc/r	304/196 cc/r
Working Pressure	400 bar	343 bar	343 bar
2-Speed Switching Pressure	20~70 bar	20~70 bar	20~70 bar
Ratio Options	60.6	76.4	87
Max. Output Torque	100500 N.m	126900 N.m	144500 N.m
Max. Output Speed	33.7 rpm	30 rpm	26.6 rpm
Machine Application	58~60 Ton	65 Ton	80 Ton

Connection Dimensions

Frame Orientation Diameter	A	420 mm	450 mm	450 mm
Frame Holes P.C.D.	B	470 mm	470 mm	510 mm
Frame Bolt Pattern	M	24-M24 EQS	24-M24 EQS	30-M24 EQS
Sprocket Orientation Diameter	C	570 mm	570 mm	576 mm
Sprocket Holes P.C.D.	D	620 mm	600 mm	626 mm
Sprocket Bolt Pattern	N	24-M24 EQS	26-M24 EQS	30-M24 EQS
Flange Distance	E	148 mm	180 mm	170 mm
Approximate Weight		700 kg	800 kg	1000 kg

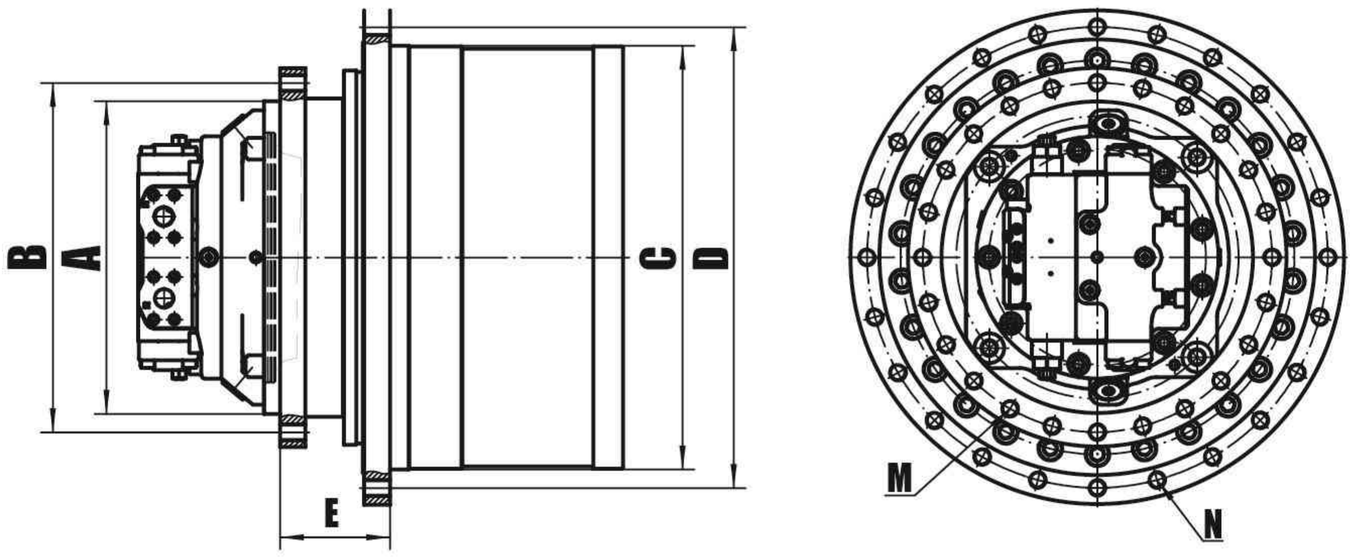



700CT SERIES TRACK DRIVE

Extremely compact, lightweight, efficient and smooth to operate, WEITAI WBM-700CT series track drives are traveling devices integrated axial piston hydraulic motors with planetary reducers.

The high efficiency dual displacement motor, with flushing valve, is suitable for closed loop applications.

The high strength designed gearbox with a large gear ratio range of 19 to 53 is applied for widely torque output.

It is widely used for compact track loader, dozer, paver, harvester, soil compactor, other forestry machinery and agricultural machinery.

- Compact Design
- High Efficiency
- Rugged Structure
- High Load Capacity
- Wide Ration Range
- Separated Brake Port
- Inside Flushing Valve
- Optional Speed Sensor





Specifications

Model	WBM-704CT	WBM-707TD	WBM-707CT	WBM-709CT
Max. Output Torque	3700 N.m	7300 N.m	10500 N.m	11500 N.m
Max. Output Speed	115 rpm	80 rpm	50 rpm	50 rpm
Max Working Pressure	275 bar	300 bar	275 bar	300 bar
Machine Application	2.5~3.5 Ton	5~6.5 Ton	6~8 Ton	7~9 Ton

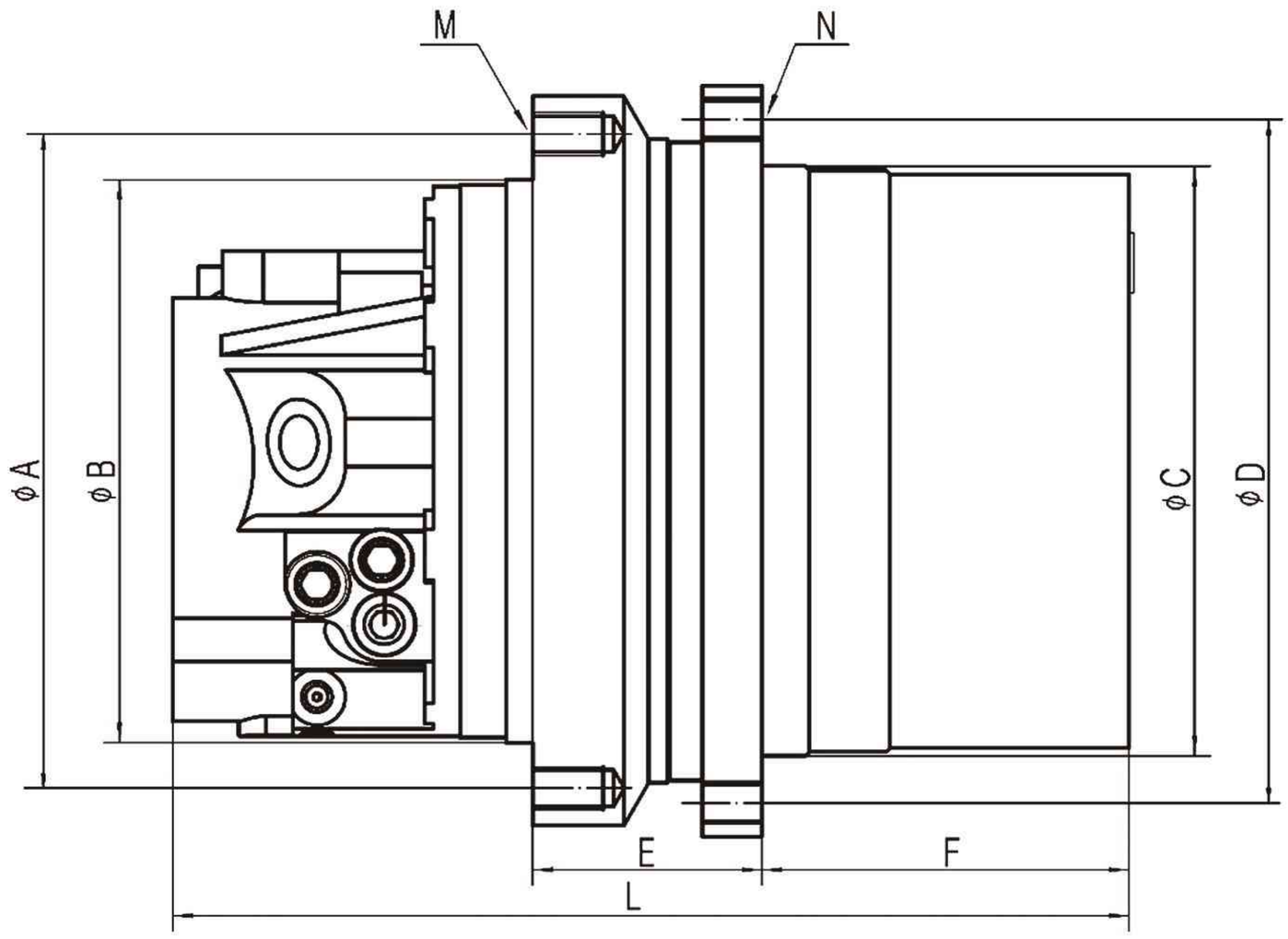

Connection Dimensions

Model	A	B	C	D	E	F	L	M	N
WBM-704CT	244	210	220	255	75	136	355	12-M16	12-M16
WBM-707TD	275	240	250	290	110	151	393	18-M16	18-M16
WBM-707CT	244	210	250	282	68	157	360	12-M14	12-M14
WBM-709CT	250	210	265	300	80	150	365	12-M16	12-M16

WBM Close loop Final Drive

Features

- For close loop application.
- Double speed motor integrated with planetary reducer.
- Separated parking brake port.
- With flushing valve.
- Speed transducer is optional.
- Same dimension with standard WTM travel motors.



Specifications

Model	WBM-22	WBM-30	WBM-40
Max. Output Torque	20000 N.m	33000 N.m	147500 N.m
Max. Output Speed	52 rpm	32.6 rpm	57 rpm
Max Working Pressure	300 bar	300 bar	343 bar
Static brake torque	410 N.m	410 N.m	490 N.m
Machine Application	10~13 Ton	18~22 Ton	20~25 Ton

Connection Dimensions

Model	A	B	C	D	E	L	M	N
WBM-22	246	280	324	364	100	388	20-M16	15-M16
WBM-30	246	280	324	364	100	522	18-M16	15+3-M16
WBM-40	300	340	402	440	100	571	30-M16	22-M16

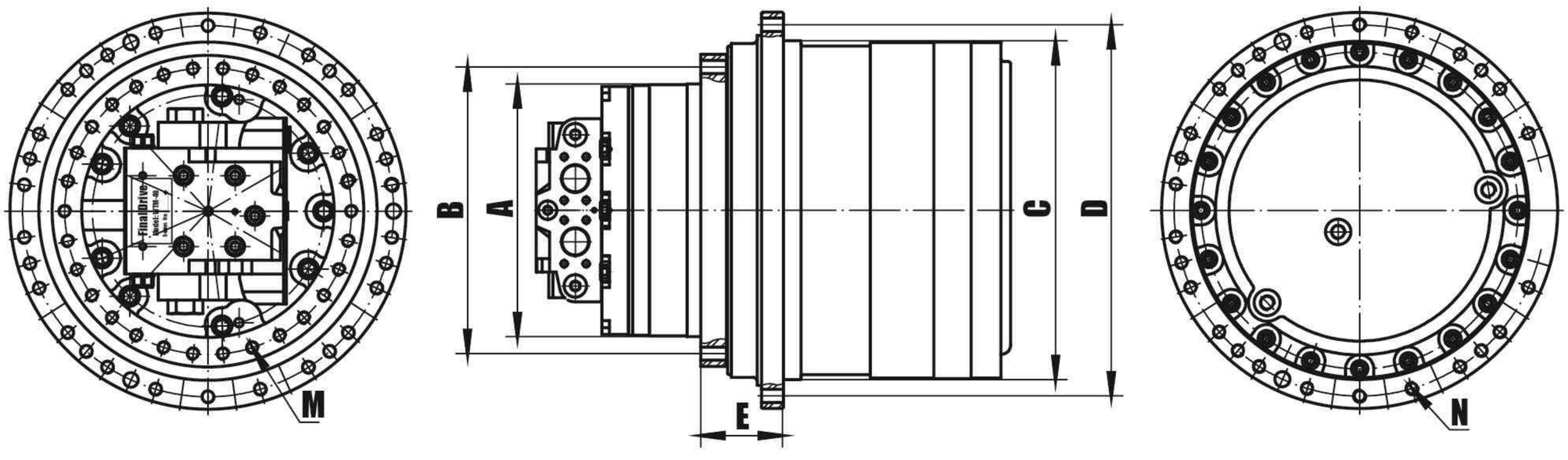

BMVT series Close loop Final Drive

Features

- For close loop application.
- Double speed motor integrated with planetary reducer.
- Separated parking brake port.
- With flushing valve.
- Speed transducer is optional.
- Interchangeable with BMVT motors.



Specifications

Model	WBM-32VT	WBM-51VT	WBM-55VT	WBM-75VT
Max. Output Torque	4400 N.m	6700 N.m	11000 N.m	20000 N.m
Max. Output Speed	120 rpm	120 rpm	105 rpm	100 rpm
Max Working Pressure	343 bar	343 bar	343 bar	343 bar
Static brake torque	220 N.m	360 N.m	460 N.m	700 N.m
Machine Application	5~6 Ton	6~8 Ton	7~9 Ton	12~16 Ton

Connection Dimensions

Model	A	B	C	D	E	L	M	N
WBM-32VT	240	200	200	241.3	106	327	9-M14	9-M16
WBM-51VT	318	340	240	282	123	344	10-φ17	9-M16
WBM-55VT	316	260	320	355	93	475	16-M16	16-M16
WBM-75VT	290	250	280	305	82	458	16-M20	20-M16

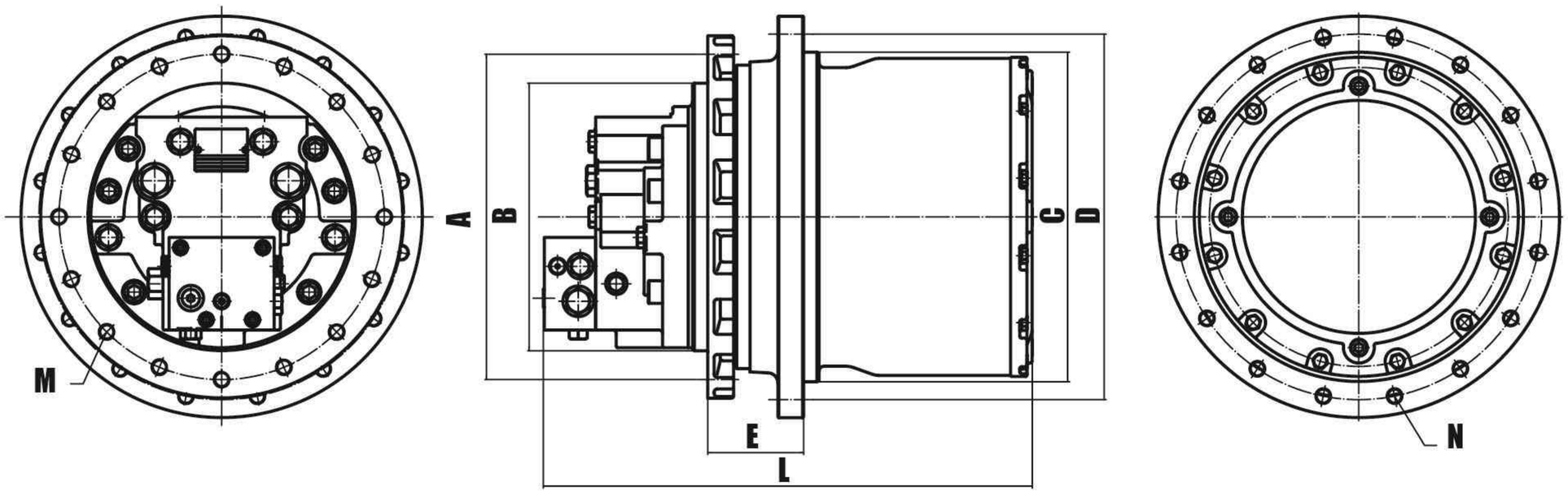

CT series Close loop Final Drive

Features

- For close loop application.
- Double speed motor integrated with planetary reducer.
- Separated parking brake port.
- Speed transducer is optional.
- Interchangeable with CT Torque Hub.



Specifications

Model	WBM-CT04	WBM-CT07	WBM-CT11	WBM-CT17
Max. Output Torque	3900 N.m	5460 N.m	7180 N.m	12900 N.m
Max. Output Speed	100 rpm	110 rpm	100 rpm	60 rpm
Max Working Pressure	300 bar	343 bar	343 bar	343 bar
Static brake torque	310 N.m	400 N.m	400 N.m	400 N.m
Machine Application	3~4 Ton	5~6 Ton	6~8 Ton	9~11 Ton

Connection Dimensions

Model	A	B	C	D	E	L	M	N
WBM-CT04	280	254.8	232.15	285	75	355	12-M14	10-M16
WBM-CT07	280	254.8	232.15	285	75	385	12-M14	10-M16
WBM-CT11	280	254.8	250	285	75	413	12-M14	10-M16
WBM-CT17	280	254.8	280	315	75	436	12-M14	10-M16

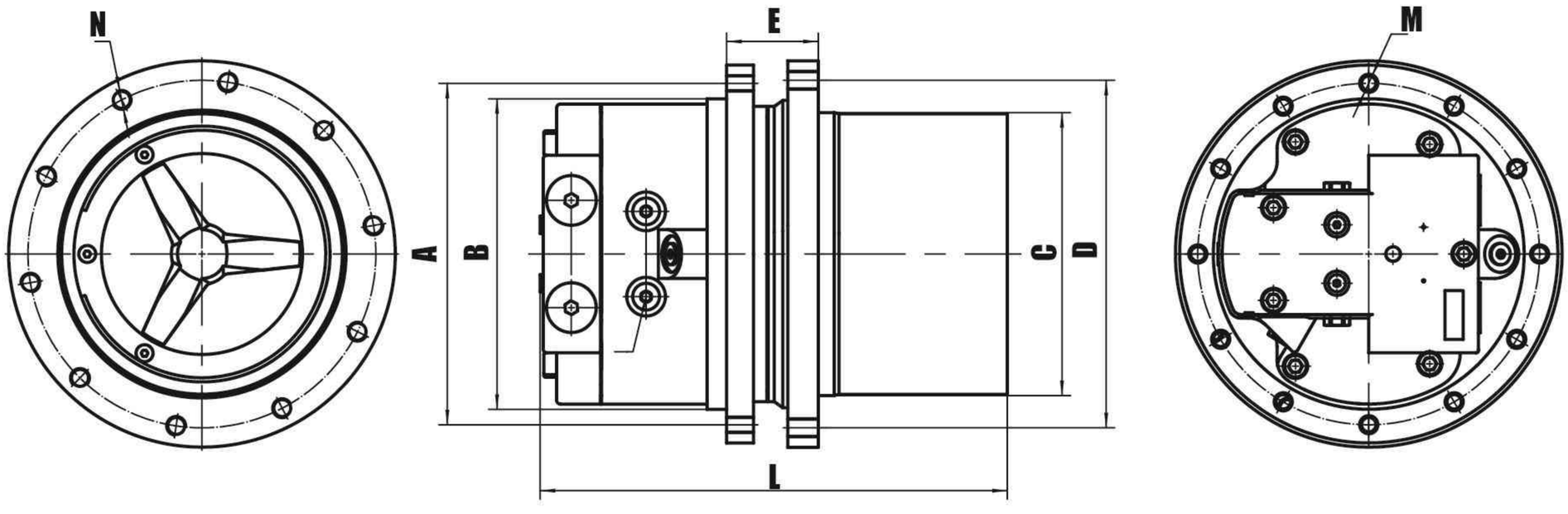

MCR series Radial Piston Motor

Key Features

- Big torque with High speed
- Compact design without Gearbox
- High driving efficiency
- Interchangeable with OEM parts.
- Single speed and Double speed options.
- Shaf output, Wheel hub, Flange output options.
- Parking brake and Drum brake options.
- Flushing valve, speed transducer, steering wheel options.



Specifications

Model	MCR(E)3	MCR(E)5	MCR(E)10
Displacement Range	160-400 cc/r	380-820 cc/r	780-1340 cc/r
Max. Pressure	315 bar	315 bar	315 bar
Max. Torque	1620 N.m	3320 N.m	5430 N.m
Max. speed	670 rpm	670 rpm	670 rpm
Max. Power	22 kW	35 kW	50 kW

Typical application in CTL Track Drive

Model	MCR5C	MCR10F	MCR5T	MCR6T	MCR10F	MCR10T
Displacement	820 cc/r	1340 cc/r	820 cc/r	820 cc/r	1180 cc/r	1340 cc/r
Speed	Single	Single	Single	Double	Double	Double
Sprocket	6 hole	6 hole	15 hole	15 hole	8 hole	8 hole
Application	T190	T300	T590	T590	T650	T770

Other OEM models are available.

MS series Multi-purpose motor

Key Features

- Direct drive
- Compact and robust design
- High transmission efficiency
- Superior sealing performance
- High starting torque and low noise



Technical Parameters

	① Full displacement					② Half displacement			
Model	Max.Pressure	Displacement	Max.Torque	Max.speed	Max.Power	Displacement	Max.Torque	Max.speed	Max.Power
	bar[PSI]	cm³/r [cu.in/rev]	Nm [lb.ft]	RPM	kW [HP]	cm³/r [cu.in/rev]	Nm [lb.ft]	RPM	kW [HP]
MS02	450 [6,527]	172-255 [10.5-15.6]	1800 [1,227]	580	18 [24]	86-128 [5.2-7.8]	916 [676]	590	18 [24]
MSE02	400 [5,802]	332-398 [20.2-24.3]	2500 [1,843]	265	22 [29.5]	166-199 [10.1-12.1]	1260 [930]	340	16.5 [22]
MS05	450 [6,527]	260-560 [15.9-34.2]	4000 [2,950]	350	29 [39]	130-280 [7.9-17.1]	2000 [1,475]	360	19 [25]
MSE05	400 [5,802]	503-750 [30.7-45.7]	4770 [3,518]	250	29 [39]	252-375 [15.4-22.9]	2390 [1,762]	300	19 [25]
MS08	450 [6,527]	467-934 [28.5-57.0]	6690 [4,934]	235	41 [55]	234-467 [14.2-28.5]	3345 [2,467]	250	27 [36]
MSE08	400 [5,802]	1043-1248 [63.6-76.1]	7945 [5,859]	125	41 [55]	522-624 [31.8-38.1]	3970 [2,928]	110	27 [36]
MS11	450 [6,527]	730-1259 [44.5-76.8]	9000 [6,638]	200	50 [67]	365-630 [22.3-38.4]	4500 [3,319]	200	33 [44]
MSE11	400 [5,802]	1263-1687 [77.0-102.9]	10700 [7,891]	170	50 [67]	632-630 [38.5-51.4]	5370 [3,960]	190	33 [44]
MS18	450 [6,527]	1091-2099 [66.5-128]	15000 [11,063]	170	70 [94]	546-1050 [33.3-64]	7520 [5,546]	170	47 [63]
MSE18	400 [5,802]	2340-2812 [142.8-171.6]	17900 [13,202]	90	70 [94]	1170-1406 [71.4-85.8]	8950 [6,601]	110	47 [63]
MS25	450 [6,527]	2004-3006 [122.3-183.4]	21500 [15,857]	145	90 [121]	1002-1503 [61.1-91.7]	10760 [7,936]	145	60 [80]
MS35	450 [6,527]	2439-4198 [148.8-256]	30000 [22,126]	140	110 [148]	1220-2099 [74.4-128]	10760 [11,063]	140	73 [98]
MS50	450 [6,527]	3500-6011 [213.5-366.6]	43000 [31,715]	205	140 [188]	1750-3006 [106.7-183.3]	21580 [15,878]	225	93 [125]
MS83	450 [6,527]	6679-10019 [407.4-611.1]	71500 [52,924]	200	200 [268]	1220-2099 [74.4-128]	35880 [26,464]	145	135 [181]
MS125	320-450 [4,640-6,530]	10000-15000 [610-915]	77000 [56,792]	130	240 [322]	5000-7500 [305-457.4]	10760 [39,618]	105	160 [215]
MS250	350-450 [5,076-6,527]	2439-4198 [148.8-256]	166950 [84,899]	100	500 [680]	–	–	–	–

PCR Swing Motor

Key Features

- The PCR series Swing Motor is consisted of high efficiency swashplate piston Motor and planetary reducing gearbox.
- Integrated fail-safe mechanical parking brake, brake release valve, shockless relief and antireverse valves.
- Small volume, smooth transmission, low noise, multi-level security protection and long life.
- Widely used in track driving equipments such as Excavators, Concrete pump, Crane and Drilling Equipments.



Specifications

Model	PCR-10-10	PCR-16-21	PCR-24-21	PCR-34-23
Input Flow	14 L/min	25 L/min	45 L/min	50 L/min
Motor Displacement	23.6 ml/r	12.5 ml/r	20 ml/r	34 ml/r
Max Working Pressure	21 Mpa	21 Mpa	21 Mpa	21 Mpa
Control Oil Pressure	2~7 Mpa	2~7 Mpa	2~7 Mpa	2~7 Mpa
Brake Release Pressure	1.5 Mpa	1.5 Mpa	1.5 Mpa	1.5 Mpa
Gear Ratio	10	21.5	21.5	23.2
Max. Output Torque	625 N.m	1000 N.m	1445 N.m	2700 N.m
Max. Output Speed	60 r/min	90 r/min	90 r/min	60 r/min
Machine Application	1~2 Ton	2~3 Ton	4~6 Ton	6~8 Ton

Connection Dimensions

Model	A	B	C	E	H	L	Shaft Gear
PCR-10-10	110	168	193	67	6-Φ13	264	M5-13T
PCR-16-21	150	210	242	92	6-Φ17(2-M16)	278	M5-13T
PCR-24-21	175	220	248	94	10-Φ17	278	M7-11T
PCR-34-23	190	250	280	112	8-Φ17(2-M16)	375	M7-14T

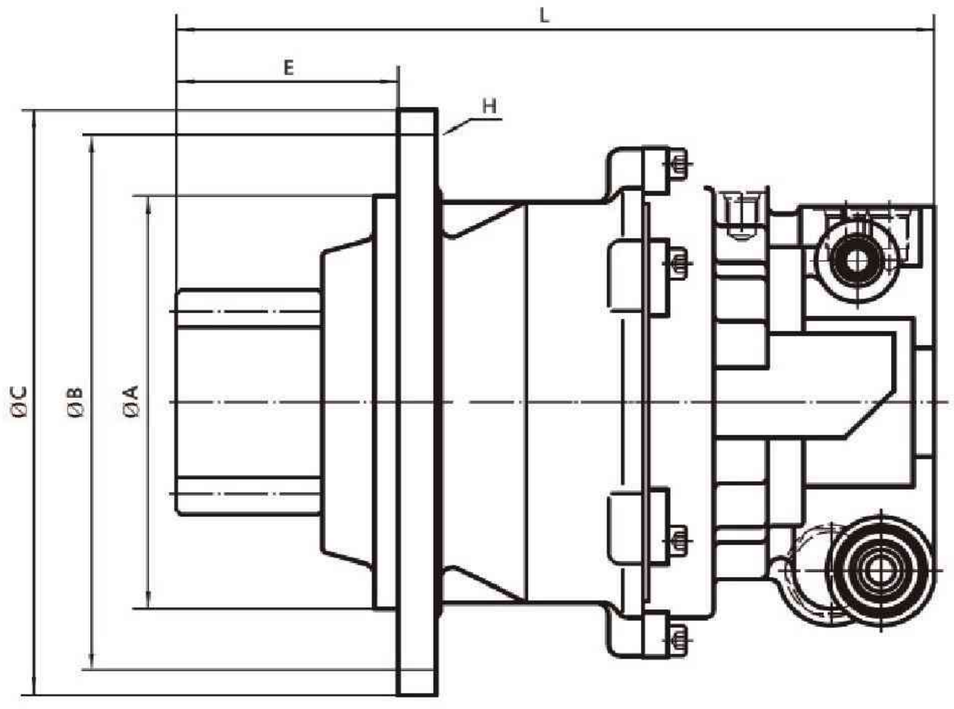

WSM Swing Motor

Key Features

- Consisted of high efficiency swashplate piston Motor and planetary reducing gearbox.
- Built-in Relief Valve, Anti-reverse Valve, Parking Brake.
- Compact desigr with small volume.
- Smooth transm ission and low noise.
- Excellent performance and long durability.
- Connection dim ensions are perfect interchangeable with the famous brands.
- Widely used in arious Excavators, Concrete pump, Crane and Drilling Equlpments..



Specifications

Model	WSM-33	WSM-47	WSM-64	WSM-73	WSM-151
Input Flow	60 L/min	80 L/min	140 L/min	150 L/min	210 L/min
Motor Displacement	33 ml/r	46.8 ml/r	64 ml/r	73.3 ml/r	151 ml/r
Max Working Pressure	240 bar	226 bar	255 Mpa	255 Mpa	285 Mpa
Gear Ratio	19.46	19.46	19.2	19.2	20
Max. Output Torque	1970 N.m	3268 N.m	4972 N.m	5711 N.m	13725 N.m
Max. Output Speed	62 r/min	86.7 r/min	114 r/min	106.7 r/min	69 r/min
Weight	80 kg	80 kg	110 kg	120 kg	286 kg
Machine Application	5~6 Ton	7~8 Ton	12~14 Ton	12~15 Ton	22~45 Ton

Connection Dimensions

Model	A	B	C	E	H	L	Shaft Gear
WSM-30	200	275	303	98.1	7-Φ17	505	M7-13T
WSM-43	200	275	303	125.7	6-Φ17	533	M8-11T
WSM-64	200	290	323	115	9-Φ18+Φ20	609	M10-12T
WSM-73	200	290	323	115	9-Φ18+Φ20	609	M10-12T
WSM-151	345	400	454	179	13-Φ22+Φ24	851	M12-15T

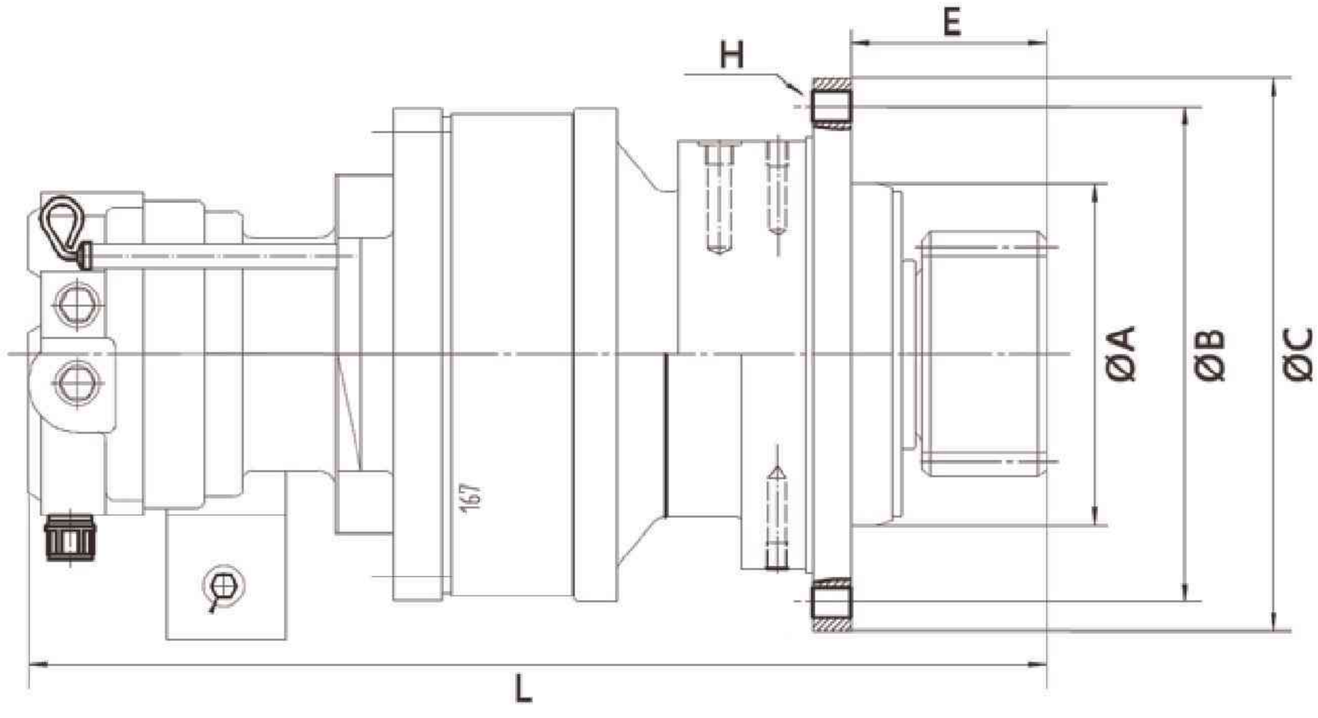

M5X Swing Motor

Key Features

- Consisted of high efficiency swashplate piston Motor and planetary reducing gearbox.
- Built-in Relief Valve, Anti-reverse Valve, Parking Brake.
- Compact desigr with small volume.
- Smooth transm ission and low noise.
- Excellent performance and long durability.
- Connection dim ensions are perfect interchangeable with the famous brands.
- Widely used in arious Excavators, Concrete pump, Crane and Drilling Equlpments..



Specifications

Model	M2X63-19	M5X130-20	M5X170-20	M5X180-25	M5X250-19
Input Flow	140 L/min	234 L/min	225 L/min	305 L/min	380 L/min
Motor Displacement	64 cc/r	130 cc/r	169.4 cc/r	180 cc/r	250 cc/r
Max Working Pressure	25.5 Mpa	25.5 Mpa	25.5 Mpa	28 Mpa	27.5 Mpa
Gear Ratio	19.2	20	20	25.2	19.5
Rated Output Torque	4972 N.m	10500 N.m	13800 N.m	20000 N.m	21424 N.m
Max. Output Speed	114.6 rpm	80.5 rpm	66.6 rpm	66 rpm	77.6 rpm
Machine Application	12~15 Ton	15~20 Ton	20~23 Ton	30~32 Ton	25~35 Ton

Connection Dimensions

Model	A	B	C	E	H	L	Shaft Gear
M2X63-19	Φ200	Φ290	Φ323	115	9-Φ18+Φ20	609	M10-Z12
M5X130-20	Φ310	Φ360	Φ410	155	11-Φ22+Φ24	800	M12-Z13
M5X170-20	Φ345	Φ400	Φ450	179.5	14-Φ24	870	M12-Z13
M5X250-19	Φ350	Φ430	Φ480	179.5	12-Φ26	760	M12-Z13
M5X180-25	Φ380	Φ484	Φ528	186	14-Φ25	897	M14-Z14

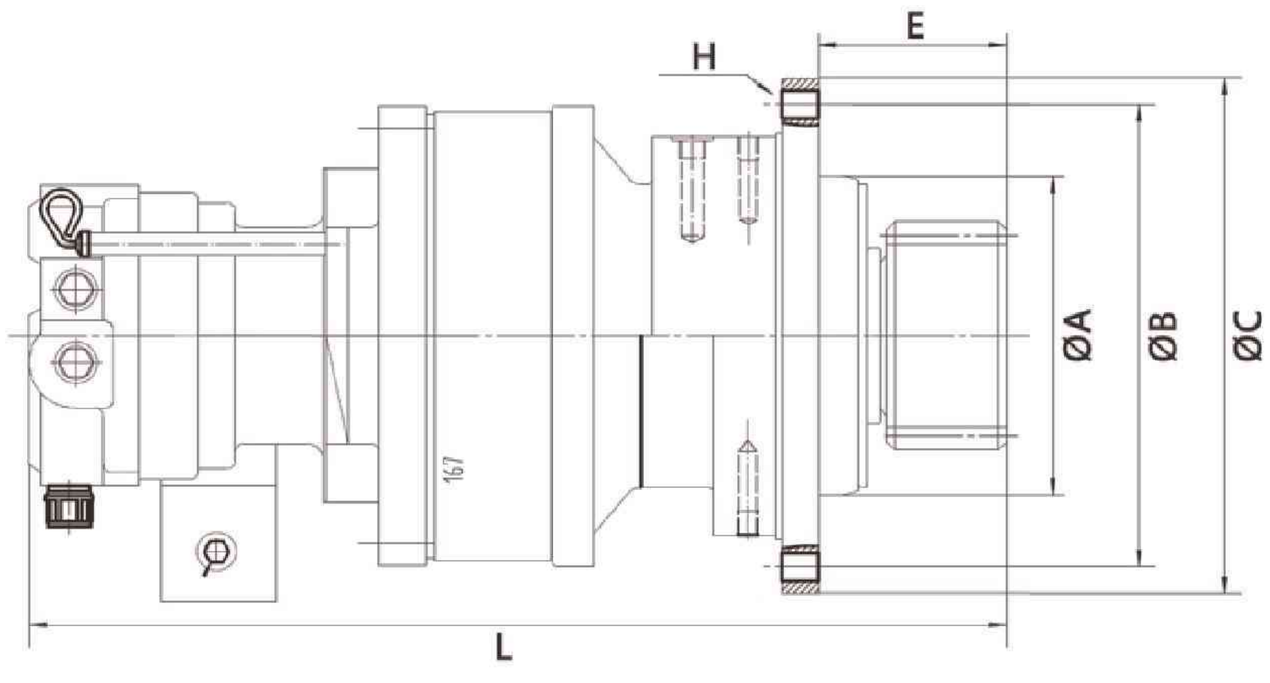

QINGDAO WEITAI HYDRAULIC CO., LTD.

TEL: +86 532 6872 1310

FAX: +86 532 6872 1157

EMAIL: sales@weitai-group.com

WEB: www.wtfinaldrive.com

